ORDER NO.MD0503088C3

DVD Home Theater Sound System

SA-HT840GC / SA-HT840GS / SA-HT840GN

Colour

(S).....Silver Type

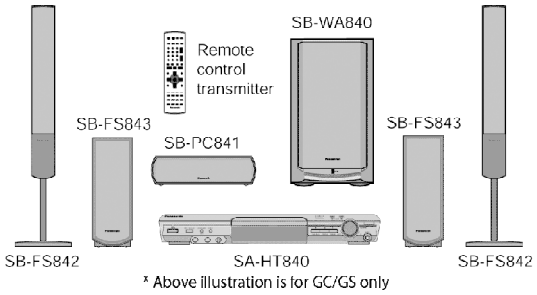

- **General**

Power Source:

GC/GS areas:	**AC 110/127/220-230/240V, 50/60Hz**
GN area:	**AC 230-240,50Hz**
Power consumption:	**25 W**
Dimensions (W×H×D):	**430×60×348.3 mm**
Mass:	**2.7 kg**

- **Amplifier section**

RMS Output Power: Dolby Digital Mode

- **Total RMS Dolby Digital mode Power:**

GC/GS areas:	**600 W**
GN area:	**800 W**

At 1kHz and total harmonic of 10%

- **Front:**

GC/GS areas:	**55 W/ Channel (6 Ω)**
GN area:	**70 W/ Channel (4 Ω)**

- **Center:**

GC/GS areas:	**160 W/ Channel (6 Ω)**
GN area:	**260 W/ Channel (4 Ω)**

- **Surround:**

GC/GS areas:	**55 W/ Channel (6 Ω)**
GN area:	**70 W/ Channel (4 Ω)**

At 100Hz and total harmonic of 10%

- **Active subwoofers:**

GC/GS areas:	**220 W/ Channel (4 Ω)**
GN araeas:	**260 W/ Channel (4 Ω)**

PMPO Output Power: Dolby Digital Mode:

- **Total PMPO Dolby Digital :**

GC/GS areas: 5000 W

DIN Output Power: Dolby Digital Mode:

- **Total DIN Dolby Digital mode Power:**

GC/GS areas:	**430 W**
GN area:	**515 W**

At 1kHz and total harmonic of 1%

- **Front:**

GC/GS areas:	**40 W/ Channel (6 Ω)**
GN area:	**45 W/ Channel (4 Ω)**

- **Center:**

GC/GS areas:	**120 W/ Channel (6 Ω)**
GN arae:	**165 W/ Channel (4 Ω)**

- **Surround:**

GC/GS araes:	**40 W/ Channel (6 Ω)**
GN area:	**50 W/ Channel (4 Ω)**

At 100Hz and total harmonic of 1%

PDF created with pdfFactory Pro trial version www.pdffactory.com

● Subwoofer:

GC/GS areas:	150 W/ Channel (4 Ω)
GN area:	160 W/ Channel (4 Ω)

● FM tuner section

Frequency Range:	87.5-108.0MHz (50kHz in step)
Sensitivity:	2.5 μ V (IHF)
S/N 26dB	2.2 μ V
Antenna Terminal:	75 Ω (non balance)

● AM tuner section (AM/MW)

Frequency Range:	
GC/GS areas:	522-1629kHz (9kHz in step) 520-1630kHz (10kHz in step)
GN area:	520-1629kHz (9kHz in step)
AM Sensitivity S/N 20dB at 999kHz:	560 μ V/m

Phone Jack:

Terminal:	Stereo 3.5mm jack

MIC Jack:

Sensitivity:	
GC/GS areas:	0.7MV, 12 k Ω
Terminal:	
GC/GS areas:	Mono 6.3mm jack (2 system)

● Disc section

Discs played [8 cm or 12 cm]:

(1) DVD-RAM (DVD-VR compatible, JPEG formatted discs)
(2) DVD-Audio
(3) DVD-Video
(4) DVD-R, DVD-RW (DVD-Video compatible)
+R, +RW (Video compatible)
(5) CD-Audio (CD-DA)
(6) Video CD
(7) SVCD (Conforming to IEC62107)
(8) CD-R/CD-RW (CD-DA, Video-CD, SVCD, MP3, WMA, JPEG formatted discs)
(9) MP3/WMA

● Maximum number of recognizable audio and picture contents and groups:

4000 audio and picture contents and 400 groups

● Compatible compression rate:

MP3: between 32 kbps and 320 kbps
WMA: between 48 kbps and 320 kbps

(10) JPEG

● Maximum number of recognizable audio and picture contents and groups:

4000 audio and picture contents and 400 groups

PDF created with pdfFactory Pro trial version www.pdffactory.com

- Exif Ver 2.1 JPEG Baseline files
- Picture resolution: between 320 x 240 and 6144 x 4096 pixels (sub sampling is 4:2:2 or 4:2:0)

(11) HighMAT Level 2 (Audio and Image)

Pick up:

Wavelength:

- CD: 785nm
- DVD: 662nm

Laser power: CLASS 2/ CLASS 3A

Audio output (DISC):

Number of channels: 5.1 ch (FL, FR, C, SL, SR, SW)

Audio performance (measured at REC OUT terminal):

Frequency response:

DVD (linear audio): 10 Hz-22 kHz (48 kHz sampling)
10 Hz-44 kHz (96 kHz sampling)

DVD-Audio: 10 Hz-88 kHz (192 kHz sampling)

CD-Audio: 10 Hz-20 kHz

S/N ratio:

CD-Audio: 95 dB

Dynamic range:

DVD (linear audio): 95 dB

CD-Audio: 93 dB

Total harmonic distortion:

CD-Audio: 0.005 %

- Video section

Video system:

Signal system: PAL 625/50, PAL 525/60, NTSC

Composite video output:

Output level: 1 Vp-p (75 Ω)

Terminal: Pin jack (1 system)

S-video output:

Y output level: 1 Vp-p (75 Ω)

C output level: PAL; 0.3Vp-p (75 Ω)
NTSC; 0.286 Vp-p (75 Ω)

Terminal S terminal (1 system)

Component video output :

GC/ GS areas: NTSC: 525(480)P / 525(480)I:
PAL: 625(576)P / 625(576)I:

GN area: (480P/480I):

Y output level: 1 Vp-p (75 Ω)

PB output level: 0.7 Vp-p (75 Ω)

PR output level: 0.7 Vp-p (75 Ω)

Terminal: Pin jack (Y: green, PB: blue, PR: red) (1 system)

PDF created with pdfFactory Pro trial version www.pdffactory.com

Power consumption in standby mode:

GC/GS areas: approx 0.9 W

GN area: approx 0.7 W

Note:

1. **Specifications are subject to change without notice. Mass and dimensions are approximate.**
2. **Total harmonic distortion is measured by the digital spectrum analyzer.**

Solder:

This model uses lead free solder (PbF).

system	**SC-HT840GC/GS-S**
Main unit	**SA-HT840GC/GS-S**
Front speakers	SB-FS842GC
Center speaker	SB-PC841GC
Surround speakers	SB-FS843GC
Active subwoofer	SB-WA840GC-S

system	**SC-HT840GN**
Main unit	**SA-HT840GN**
Front speakers	SB-FS840EB
Center speaker	SB-PC840EB-S
Surround speakers	SB-FS841EB
Active subwoofer	SB-WA840GN-S

MPEG Layer-3 audio decoding technology licensed from Fraunhofer IIS and Thomson multimedia.

Windows Media, and the Windows logo are trademarks, or registered trademarks of Microsoft Corporation in the United States and/ or other countries.
WMA is a compression format developed by Microsoft Corporation. It achieves the same sound quality as MP3 with a file size that is smaller than that of MP3.

Designed for Windows Media™

HIGH MAT AUDIO·IMAGE

HighMAT and the HighMAT logo are either trademarks or registered trademarks of Microsoft Corporation in the United States and/ or other countries.

■ **Built-in decoders**

You can play discs with these symbols.

DOLBY DIGITAL

DIGITAL dts SURROUND

© 2005 Panasonic AVC Networks Singapore Pte. Ltd. All rights reserved. Unauthorized copying and distribution is a violation of law.

PDF created with pdfFactory Pro trial version www.pdffactory.com

Panasonic

1. Use of Active Subwoofer

1.1. Checking Player when Active Subwoofer is not used

1. This unit uses the active subwoofer to supply the power of the component, and the active subwoofer should be connected to the component to check operational conditions of the component.

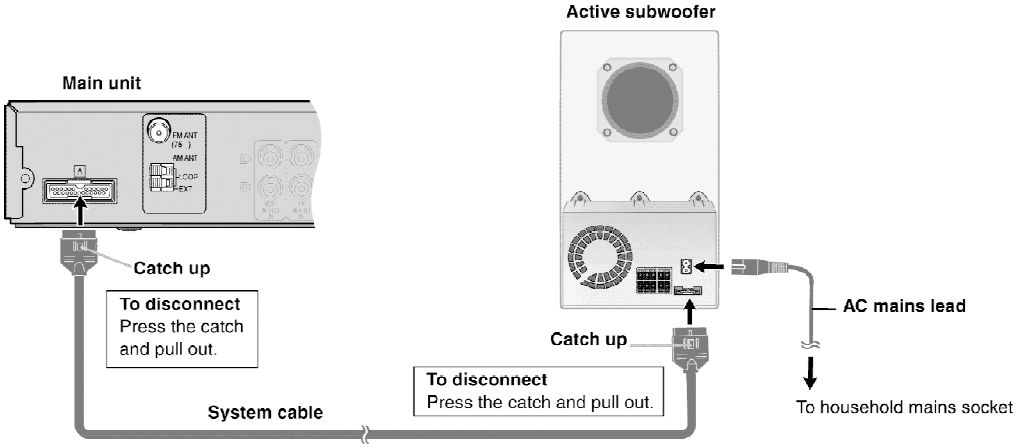

2. If the active subwoofer is not available due to repair of the unit, use the following equipment.

PDF created with pdfFactory Pro trial version www.pdffactory.com

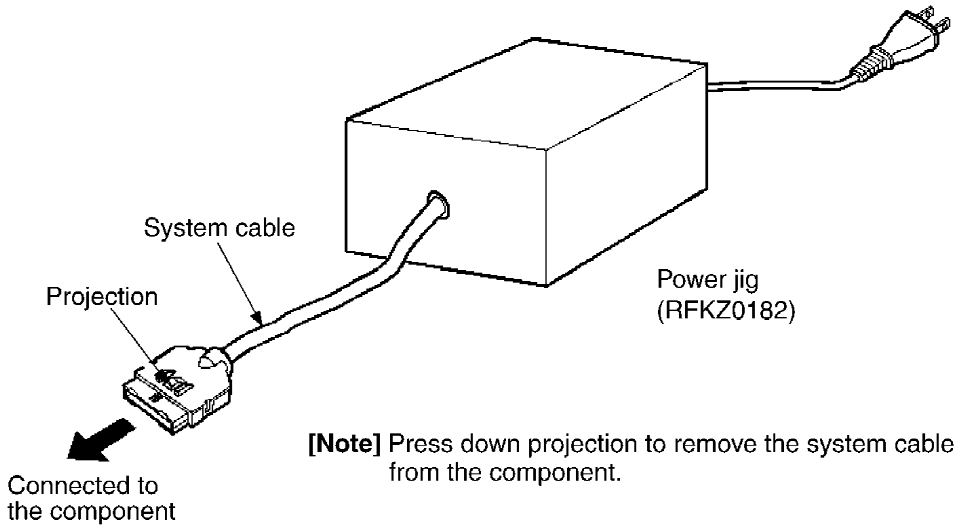

Jig product number: RFKZ0182 (110V, 127V, 220V, 230V-240V for overseas domestic use)

2. Safety Precautions

2.1. GENERAL GUIDELINES

1. **When servicing, observe the original lead dress. If a short circuit is found, replace all parts which have been overheated or damaged by the short circuit.**
2. **After servicing, see to it that all the protective devices such as insulation barriers, insulation papers shields are properly installed.**
3. **After servicing, carry out the following leakage current checks to prevent the customer from being exposed to shock hazards.**

2.1.1. LEAKAGE CURRENT COLD CHECK

1. **Unplug the AC cord and connect a jumper between the two prongs on the plug.**
2. **Measure the resistance value, with an ohmmeter, between the jumpered AC plug and each exposed metallic cabinet part on the equipment such as screwheads, connectors, control shafts, etc. When the exposed metallic part has a return path to the chassis, the reading should be between 1M Ω and 5.2M Ω . / When the exposed metal does not have a return path to the chassis, the**

PDF created with pdfFactory Pro trial version www.pdffactory.com

reading must be ∞.

Figure 1

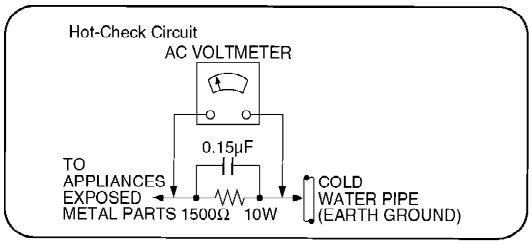

2.1.2. LEAKAGE CURRENT HOT CHECK (See Figure 1 .)

1. **Plug the AC cord directly into the AC outlet. Do not use an isolation transformer for this check.**
2. **Connect a 1.5k Ω , 10 watts resistor, in parallel with a 0.15 µ F capacitors, between each exposed metallic part on the set and a good earth ground such as a water pipe, as shown in Figure 1.**
3. **Use an AC voltmeter, with 1000 ohms/volt or more sensitivity, to measure the potential across the resistor.**
4. **Check each exposed metallic part, and measure the voltage at each point.**
5. **Reverse the AC plug in the AC outlet and repeat each of the above measurements.**
6. **The potential at any point should not exceed 0.75 volts RMS. A leakage current tester (Simpson Model 229 or equivalent) may be used to make the hot checks, leakage current must not exceed 1/2 milliamp. In case a measurement is outside of the limits specified, there is a possibility of a shock hazard, and the equipment should be repaired and rechecked before it is returned to the customer.**

3. Prevention of Electro Static Discharge (ESD) to Electrostatically Sensitive (ES) Devices

Some semiconductor (solid state) devices can be damaged easily by static electricity. Such components commonly are called Electrostatically Sensitive (ES) Devices. Examples of typical ES devices are integrated circuits and some field-effect transistors and semiconductor "chip" components. The following techniques should be used to help reduce the incidence of component damage caused by electro static discharge (ESD).

1. **Immediately before handling any semiconductor component or**

PDF created with pdfFactory Pro trial version www.pdffactory.com

semiconductor-equipped assembly, drain off any ESD on your body by touching a known earth ground. Alternatively, obtain and wear a commercially available discharging ESD wrist strap, which should be removed for potential shock reasons prior to applying power to the unit under test.

2. After removing an electrical assembly equipped with ES devices, place the assembly on a conductive surface such as aluminum foil, to prevent electrostatic charge buildup or exposure of the assembly.
3. Use only a grounded-tip soldering iron to solder or unsolder ES devices.
4. Use only an anti-static solder removal device. Some solder removal devices not classified as "anti-static (ESD protected)" can generate electrical charge sufficient to damage ES devices.
5. Do not use freon-propelled chemicals. These can generate electrical charges sufficient to damage ES devices.
6. Do not remove a replacement ES device from its protective package until immediately before you are ready to install it. (Most replacement ES devices are packaged with leads electrically shorted together by conductive foam, aluminum foil or comparable conductive material).
7. Immediately before removing the protective material from the leads of a replacement ES device, touch the protective material to the chassis or circuit assembly into which the device will be installed.

   Caution

   Be sure no power is applied to the chassis or circuit, and observe all other safety precautions.
8. Minimize bodily motions when handling unpackaged replacement ES devices. (Otherwise harmless motion such as the brushing together of your clothes fabric or the lifting of your foot from a carpeted floor can generate static electricity (ESD) sufficient to damage an ES device).

PDF created with pdfFactory Pro trial version www.pdffactory.com

IMPORTANT SAFETY NOTICE

There are special components used in this equipment which are imporant for safety.
These parts are marked by ⚠ in the schematic diagrams, Exploded Views and replacement parts list. It is essential that these critical parts should be replaced with manufacturer's specified parts to prevent shock, fire, or other hazards. Do not modify the original design without permission of manufacturer.

4. Before Repair and Adjustment (Using Active Subwoofer)

Disconnect AC power, discharge Power Supply Capacitors C546~C549 through a 10 Ω, 10 W resistor to ground.
DO NOT SHORT-CIRCUIT DIRECTLY (with a screwdriver blade, for instance), as this may destroy solid state devices.
After repairs are completed, restore power gradually using a variac, to avoid overcurrent.
Current consumption at AC 230 - 240 V, 50 Hz in NO SIGNAL mode should be ~ 420 mA (For GS) & ~620 mA (For GN).
Current consumption at AC 100/110 V, 50/60Hz in NO SIGNAL mode should be ~835 mA (For GC).

5. Protection Circuitry

The protection circuitry may have operated if either of the following conditions are noticed:

- No sound is heard when the power is turned on.

- Sound stops during a performance.

The function of this circuitry is to prevent circuitry damage if, for example, the positive and negative speaker connection wires are
"shorted", or if speaker systems with an impedance less than the indicated rated impedance of the amplifier are used.
If this occurs, follow the procedure outlines below:

1. Turn off the power.

2. Determine the cause of the problem and correct it.

3. Turn on the power once again after one minute.

Note:
When the protection circuitry functions, the unit will not operate unless the power is first turned off and then on again.

6. Precaution of Laser Diode

ON :

This product utilizers a class 1 laser. Invisible laser radiation is emitted from the optical pick up lens.
When the unit is turned on:
Wavelength : 658nm/780nm
Maximum output radiation power from pick up : 100 μ W/VDE
Laser radiation from pick up unit is safety level, but be sure the followings:

PDF created with pdfFactory Pro trial version www.pdffactory.com

1. **Do not disassemble the optical pick up unit, since radiation from exposed laser diode is dangerous.**
2. **Do not adjust the variable resistor on the pick up unit. It was already adjusted.**
3. **Do not look at the focus lens using optical instruments.**
4. **Recommend not to look at pick up lens for a long time.**

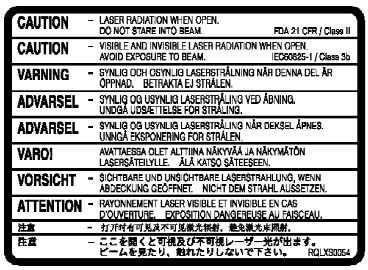

(Inside of product)

CAUTION!
THIS PRODUCT UTILIZES A LASER.
USE OF CONTROLS OR ADJUSTMENTS OR PERFORMANCE OF PROCEDURES OTHER THAN THOSE SPECIFIED HEREIN MAY RESULT IN HAZARDOUS RADIATION EXPOSURE.

7. About Lead Free Solder (PbF)

Distinction of PbF PCB: PCBs (manufactured) using lead free solder will have a Pbf stamp on the PCB.

Caution:

- **Pb free solder has a higher melting point than standard solder; Typically the melting point is 50 - 70°F (30 - 40°C) higher. Please use a high temperature soldering iron. In case of the soldering iron with temperature control, please set it to 700 ± 20°F (370 ± 10°C).**
- **Pb free solder will tend to splash when heated too high (about 1100°F/ 600°C).**

When soldering or unsoldering, please completely remove all of the solder on the pins or solder area, and be sure to heat the soldering points with the Pb free solder until it melts enough.

8. General Description

8.1. Operating instructions

8.2. Disc information

PDF created with pdfFactory Pro trial version www.pdffactory.com

Tips for making WMA/MP3 and JPEG discs (For CD-R, CD-RW)

- Discs must conform to ISO9660 level 1 or 2 (except for extended formats).
- This unit supports multi-session but if there are a lot of sessions it takes more time for play to start. Keep the number of sessions to a minimum to avoid this.
- When there are more than 8 groups, the eighth group onwards will be displayed on one vertical line in the menu screen.
- There may be differences in the display order on the menu screen and computer screen.
- This unit cannot play files recorded using packet write.

Naming folders and files
(Files are treated as content and folders are treated as groups on this unit.)
At the time of recording, prefix folder and file names with 3-digit numbers in the order you want to play them (this may not work at times).
Files must have the extension:
".WMA" or ".wma"
".MP3" or ".mp3"
".JPG", ".jpg", ".JPEG" or ".jpeg"

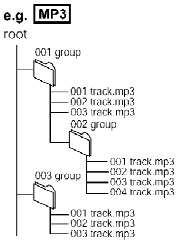

WMA

- You cannot play WMA files that are copy protected.
- This unit does not support Multiple Bit Rate (MBR).

MP3

This unit does not support ID3 tags.
Compatible sampling rates: 8, 11.02, 12, 16, 22.05, 24, 32, 44.1 and 48 kHz.

JPEG

- To view JPEG files on this unit:
  - Take them on a digital camera that meets the DCF Standard (Design rule for Camera File system) Version 1.0. Some digital cameras have functions that are not supported by the DCF Standard Version 1.0 like automatic picture rotation which may render a picture un-viewable.
  - Do not alter the files in any way or save them under a different name.
- This unit cannot display moving pictures, MOTION JPEG and other such formats, still pictures other than JPEG (e.g. TIFF) or play pictures with attached audio.

8.3. About HighMAT

8.3.1. What's HighMAT?

Consumers worldwide are using PCs to create their own collections of music, photos and even video by burning them onto CDs. But how these collections can be experienced across different devices can be confusing to navigate, time consuming to access for a DVD player, and be incomplete in terms of music information available to the customer.
HighMAT offers a solution to this growing consumer problem. HighMAT dramatically improves the digital media experience on consumer electronic devices by delivering a simple, standardized approach that allows consumers who have created personal collections of digital music, photography and video on their PC to:
>> Create a HighMAT CD or DVD which can be easily played back on consumer electronics devices such as CD and DVD players, and car stereos.
>> Move digital media files (using recordable media such as CD-R and CD-RW) between the PC and various playback devices such as CD and DVD players.
A new standard for creating personal media on consumer electronic devices, HighMAT enable easier and more seamless interoperability between Windows PCs and devices designed for your living room, or the car.

PDF created with pdfFactory Pro trial version www.pdffactory.com

HighMAT Audio
Products which display this logo are able to play back HighMAT audio content only (WMA, MP3)

HighMAT Audio and Image
Products which display this logo are able to play back HighMAT audio content (WMA, MP3) and still pictures (JPEG) only

HighMAT Audio, Image and Video
Products which display this logo are able to play back all three types of HighMAT content: Audio (WMA, MP3), still pictures (JPEG) and video (WMV, MPEG-4※)
※MPEG-4: support is optional

8.3.2. Why take advantage of HighMAT?

A Problem Defined:Today, when consumers create their own digital audio, video or photo collections on CD-R or other physical formats, there are numerous, inconsistent ways that devices read the data. For the consumer, the playback experience can be confusing:

- Many consumer electronics devices do not support playlists or advanced playback options such as the ability to access content by date or genre.
- The user interface for accessing the media and any associated information (including playlists, folders, music metadata and more) may vary between different devices.
- Large collections of music, videos or photos may take several minutes for a CD or DVD player to read.
- Discs may be unplayable because the compressed media format is not supported by the playback device or the disc layout is incompatible.

A Solution Created: HighMAT delivers a better digital media access experience by creating a standard approach for PCs to structure digital media on various physical formats and for playback devices to read the data.

8.3.3. Benefits of HighMAT?

PDF created with pdfFactory Pro trial version www.pdffactory.com

1 Creating a HighMAT CD makes it easier to navigate different types of media you want to burn onto a CD (Photos, Music).

Conventional	HighMAT
Even though DVD player is CD-R/RW compatible, the inconsistent ways that various DVD players can read the music or photos files often leads to a confusing and inconsistant playback experince.	**HighMAT compatible products play content with consistent interface. This includes pro which are JPEG compatible products witho HighMAT support.**
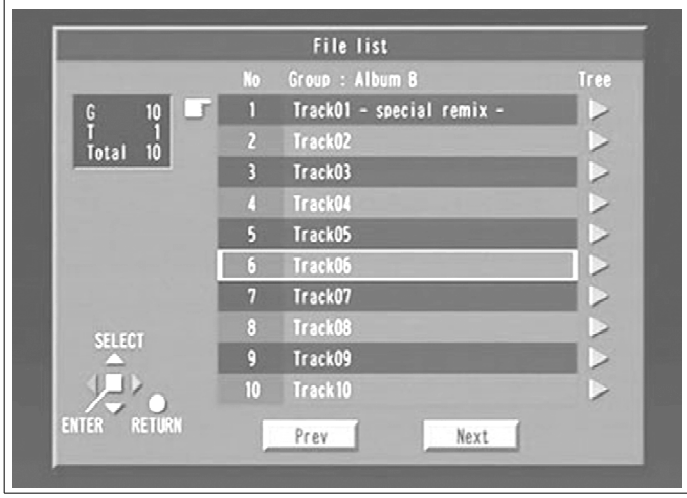	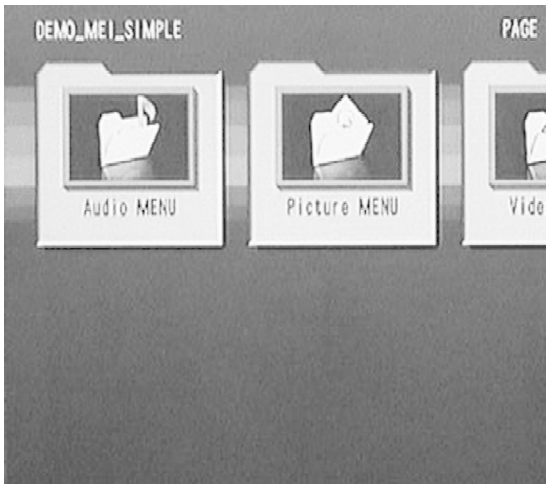

2 Eliminates compatibility issues and delivers better more consistent access to more music information like artist, song name, genre and photo information (metadata) as well as provide faster access to large amounts of music and photo files burned on CDs.

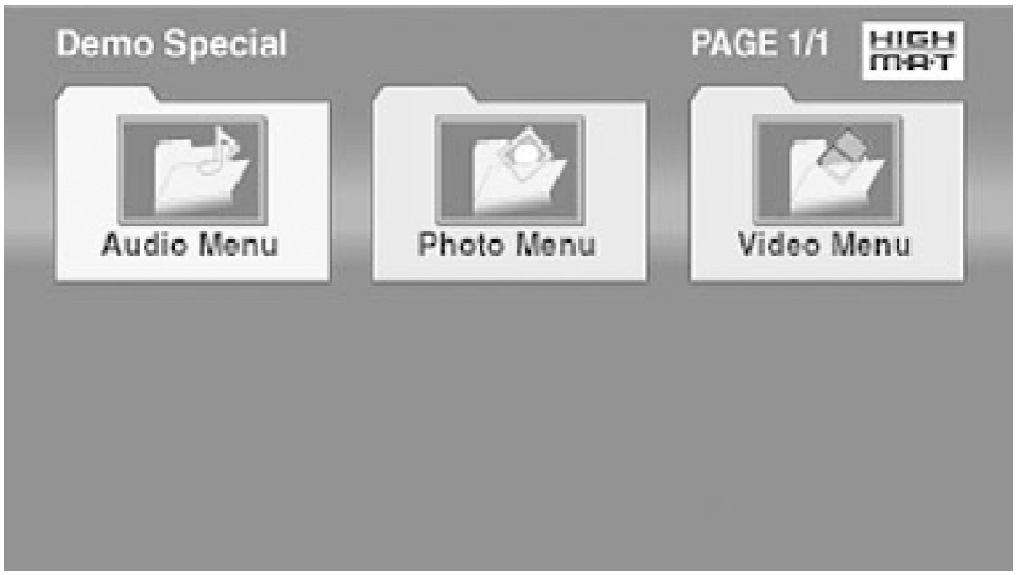

PDF created with pdfFactory Pro trial version www.pdffactory.com

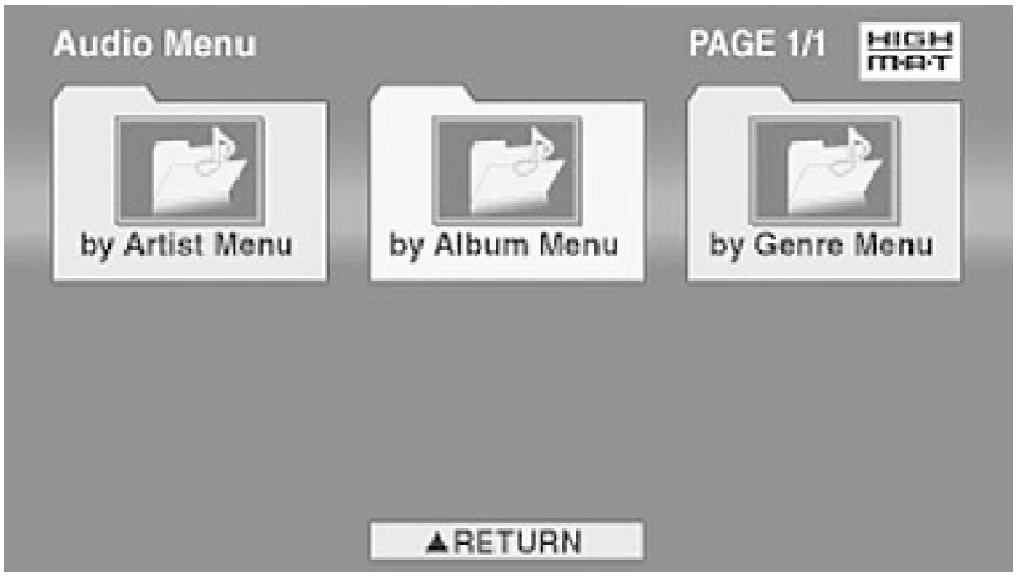

Easy navigation to access disc contents

3 HighMAT CDs can also work on other players.

PDF created with pdfFactory Pro trial version www.pdffactory.com

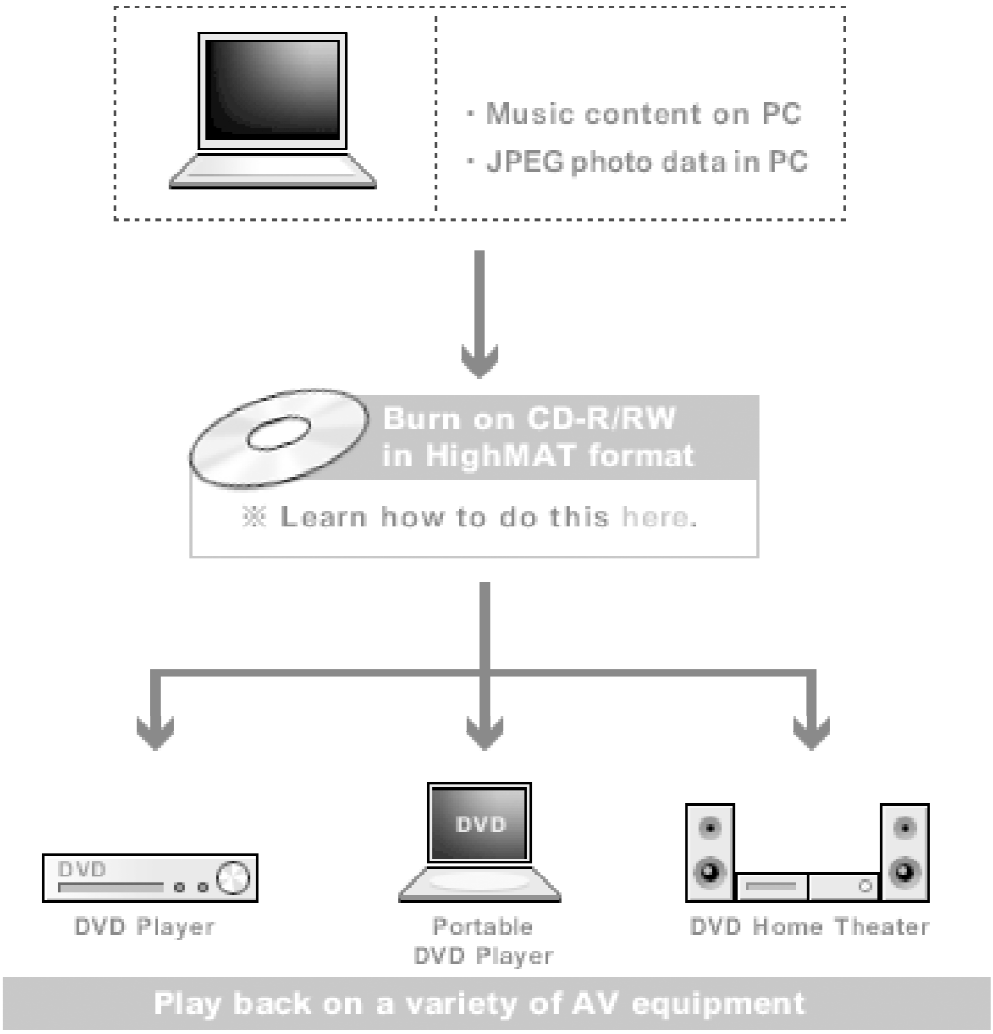

HighMAT is now available for CD Burning and in Leading DVD Players / HighMAT is a new technology that is now available in leading software and consumer electronic devices to dramatically improve the digital media experience when you create homemade CDs / HighMAT delivers a simple, standardized way for PC software and consumer electronics devices to talk to each other and work better together.
When you create your homemade CDs with software that supports HighMAT CD burning, and then play them back on a DVD player that supports HighMAT, you get better, easier navigation. You get folders you can access with a single click of your DVD player's remote control. You can view important information about your music like full song names, artist titles, album names and genre. And you can get faster startup on your home entertainment device.
To enjoy the benefits of HighMAT, all you need is software that supports HighMAT for CD burning of music or photos, as well as a home entertainment device like a DVD player that supports HighMAT for playback. Always look for the HighMAT logo on your software or home entertainment device to ensure it supports the HighMAT experience.

9. Accessories

Remote control

PDF created with pdfFactory Pro trial version www.pdffactory.com

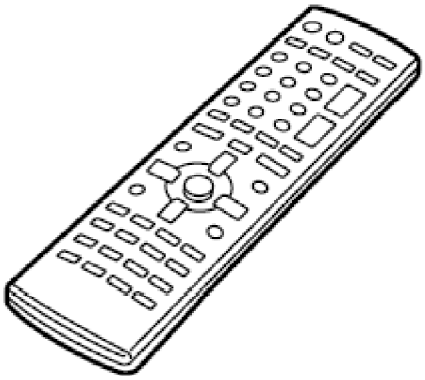

AM loop antenna

FM indoor antenna

Video Cable

Speaker cable

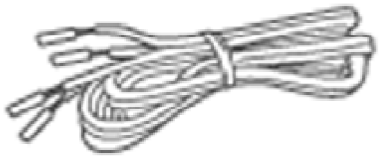

AC cord / (For GC/GS areas)

PDF created with pdfFactory Pro trial version www.pdffactory.com

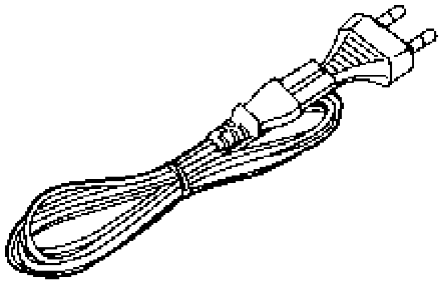

AC cord (For GS area)

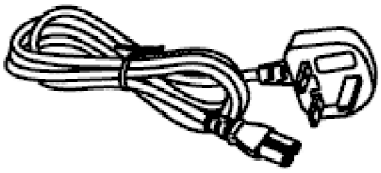

AC cord (For GN area)

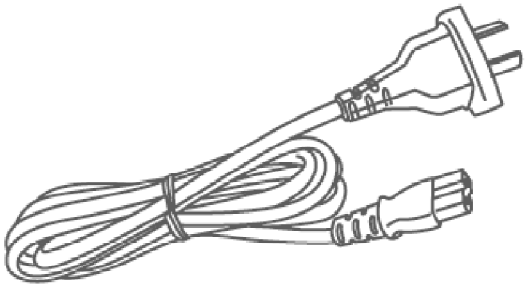

System cable

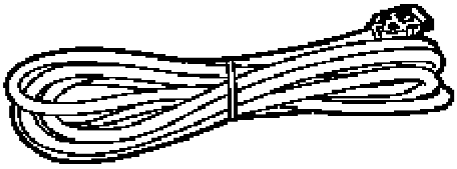

Speaker label

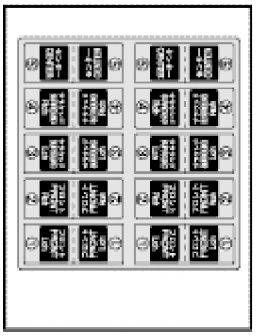

10. Caution for AC Cord

PDF created with pdfFactory Pro trial version www.pdffactory.com

(For Saudi Arabia and Kuwait)

("GS" area code model only)

For your safety, please read the following text carefully.

This appliance is supplied with a moulded three pin mains plug for your safety and convenience.
A 5-ampere fuse is fitted in this plug.
Should the fuse need to be replaced please ensure that the replacement fuse has a rating of 5-ampere and that it is approved by ASTA or BSI to BS1362.
Check for the ASTA mark or the BSI mark on the body of the fuse.

If the plug contains a removable fuse cover you must ensure that it is refitted when the fuse is replaced.
If you lose the fuse cover the plug must not be used until a replacement cover is obtained.
A replacement fuse cover can be purchased from your local dealer.

CAUTION!
IF THE FITTED MOULDED PLUG IS UNSUITABLE FOR THE SOCKET OUTLET IN YOUR HOME THEN THE FUSE SHOULD BE REMOVED AND THE PLUG CUT OFF AND DISPOSED OF SAFELY.
THERE IS A DANGER OF SEVERE ELECTRICAL SHOCK IF THE CUT OFF PLUG IS INSERTED INTO ANY 13-AMPERE SOCKET.

If a new plug is to be fitted please observe the wiring code as shown below.
If in any doubt please consult a qualified electrician.

IMPORTANT
The wires in this mains lead are coloured in accordance with the following code:
Blue: Neutral, Brown: Live.
As these colours may not correspond with the coloured markings identifying the terminals in your plug, proceed as follows:
The wire which is coloured Blue must be connected to the terminal which is marked with the letter N or coloured Black or Blue.
The wire which is coloured Brown must be connected to the terminal which is marked with the letter L or coloured Brown or Red.

WARNING: DO NOT CONNECT EITHER WIRE TO THE EARTH TERMINAL WHICH IS MARKED WITH THE LETTER E, BY THE EARTH SYMBOL ⏚ OR COLOURED GREEN OR GREEN/YELLOW.

THIS PLUG IS NOT WATERPROOF—KEEP DRY.

Before use
Remove the connector cover.

How to replace the fuse
The location of the fuse differ according to the type of AC mains plug (figures A and B). Confirm the AC mains plug fitted and follow the instructions below.
Illustrations may differ from actual AC mains plug.

1. Open the fuse cover with a screwdriver.

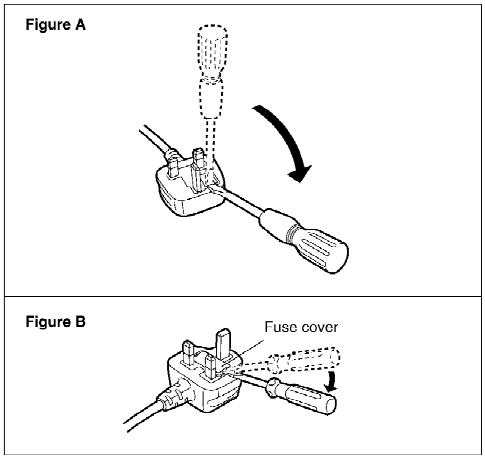

2. Replace the fuse and close or attach the fuse cover.

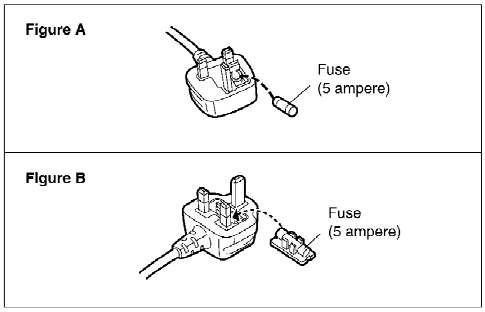

11. Handling Precautions for Optical Pickup Unit

The laser diode in the optical pickup unit may break down due to static electricity of clothes or human body. Special care must be taken avoid to electrostatic breakdown when servicing and handling the laser diode.

11.1. Cautions to Be Taken in Handling the Optical Pickup Unit

The laser diode in the optical pickup unit may be damaged due to electrostatic discharge generating from clothes or human body. Special care must be taken avoid to electrostatic discharge damage when servicing the laser diode.

1. Do not give a considerable shock to the optical pickup unit as it has an extremely high-precise structure.

PDF created with pdfFactory Pro trial version www.pdffactory.com

2. **To prevent the laser diode from the electrostatic discharge damage, the flexible cable of the optical pickup unit removed should be short-circuited with a short pin or a clip.**
3. **The flexible cable may be cut off if an excessive force is applied to it. Use with caution when handling the flexible cable.**
4. **The antistatic FPC is connected to the new optical pickup unit. After replacing the optical pickup unit and connecting the flexible cable, cut off the antistatic FPC.**

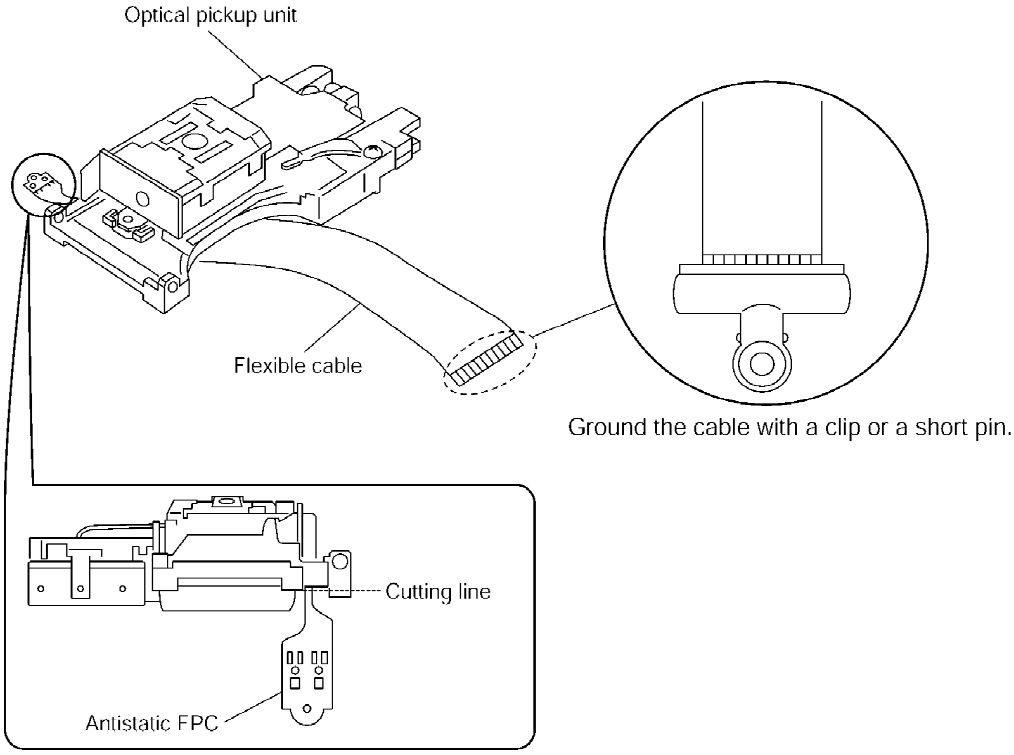

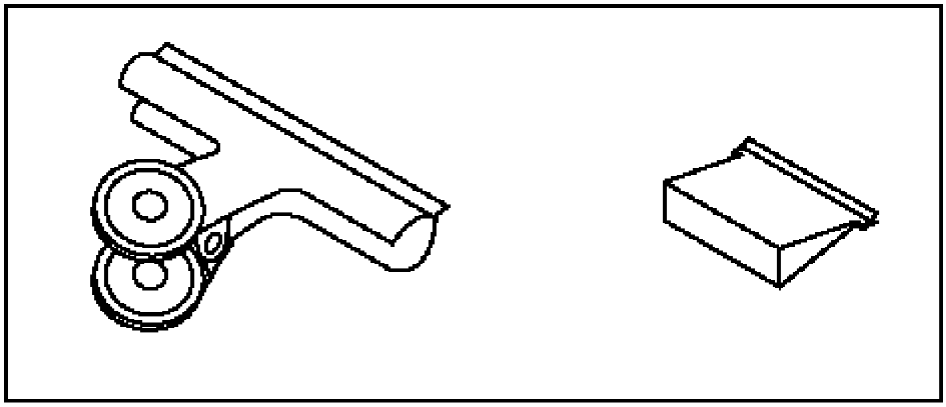

Clip or Short pin

11.2. Cautions to Be Taken When Replacing the Optical Pickup

PDF created with pdfFactory Pro trial version www.pdffactory.com

The flexible cable of the optical pickup unit which was supplied as a component is equipped with a short clip to prevent the laser diode from being damaged due to electrostatic discharge. Remove the short clip before connecting the flexible cable and make sure that the short land is open. (If the flexible cable is short-circuited, remove the solder.)

11.3. Grounding for electrostatic breakdown prevention

Some devices such as the DVD player use the optical pickup (laser diode) and the optical pickup will be damaged by static electricity in the working environment. Proceed servicing works under the working environment where grounding works is completed.

11.3.1. Worktable grounding

1. Put a conductive material (sheet) or iron sheet on the area where the optical pickup is placed, and ground the sheet.

11.3.2. Human body grounding

1. Use the anti-static wrist strap to discharge the static electricity form your body.

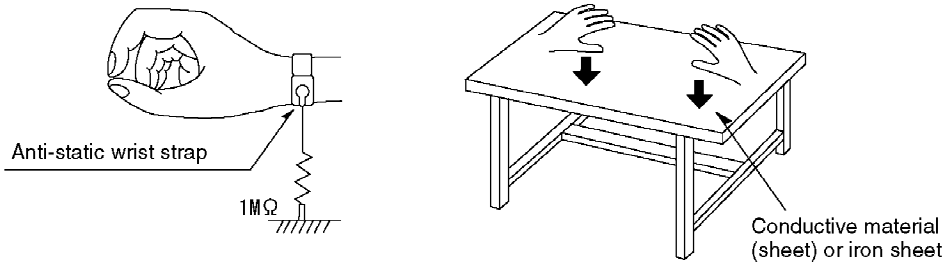

12. Disassembly and Main Component Replacement Procedure

"ATTENTION SERVICER"

Some chassis components may have sharp edges.
Be careful when disassembling and servicing.

1. This section describes procedures for checking the operation of the major printed circuit boards and replacing the main components.

2. For assembly after operation checks or replacement, reverse the respective procedures.
Special reassembly procedures are described only when required.

3. Select items from the following index when checks or replacement are required.

- Disassembling the Top Cabinet

PDF created with pdfFactory Pro trial version www.pdffactory.com

- **Disassembling the Lid assembly (When taking out disc manually)**
- **Disassembling the Front Panel**
- **Disassembling the FL P.C.B., Volume P.C.B and MIC P.C.B.[For GC/ GS only]**
- **Disassembling the DVD mechanism Unit**
- **Disassembling the DVD Module P.C.B**
- **Disassembling the Rear panel**
- **Disassembling the Main.P.C.B.**

12.1. Disassembly Procedure

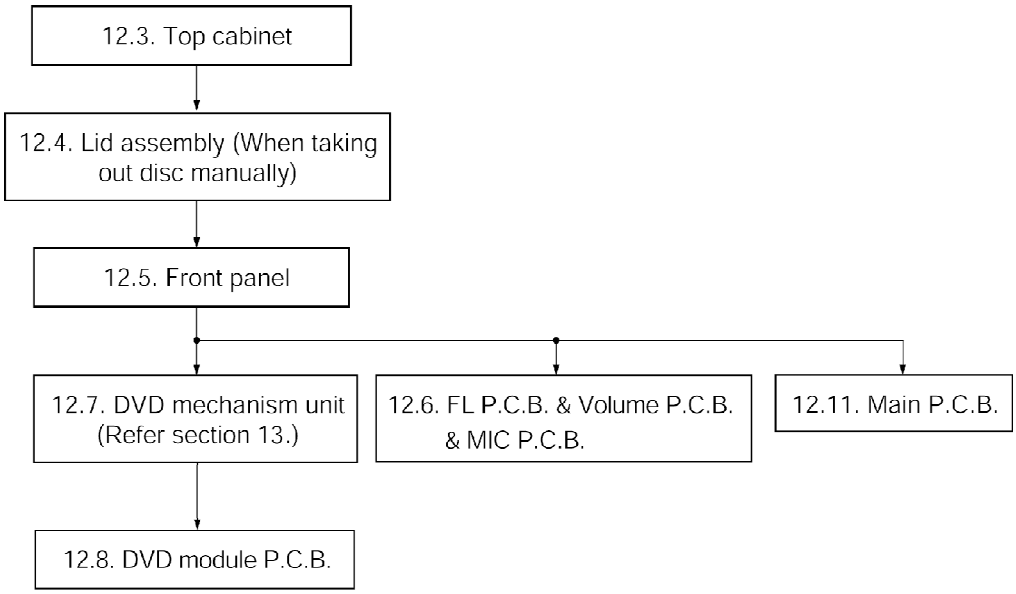

12.2. Main Components and P.C.B. Locations.

PDF created with pdfFactory Pro trial version www.pdffactory.com

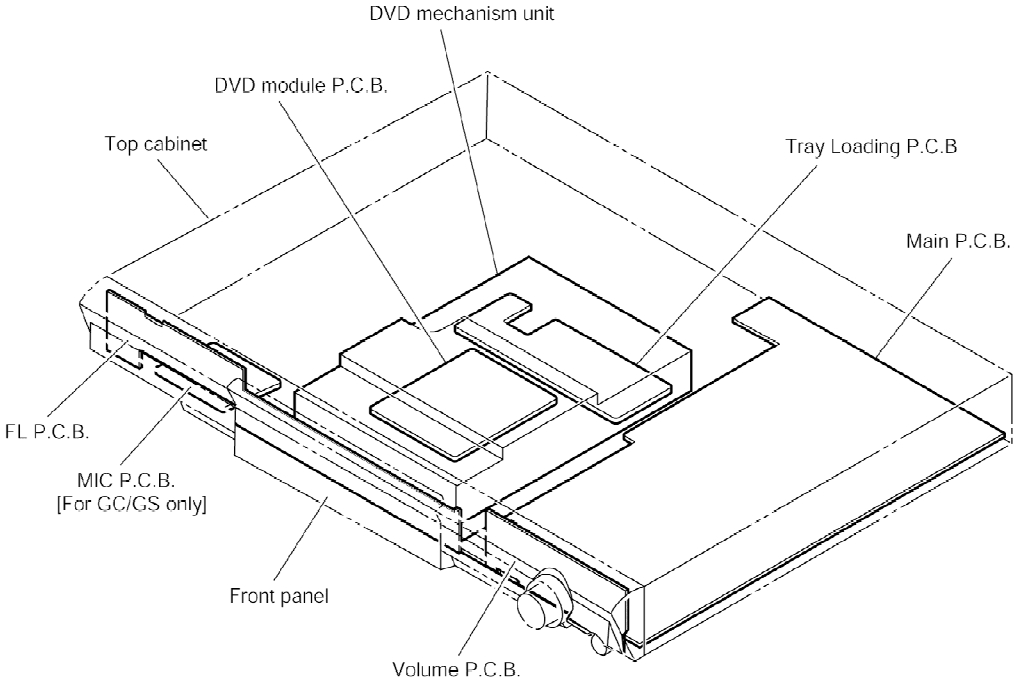

12.3. Disassembling the Top Cabinet

Step 1 Unscrew the screw.

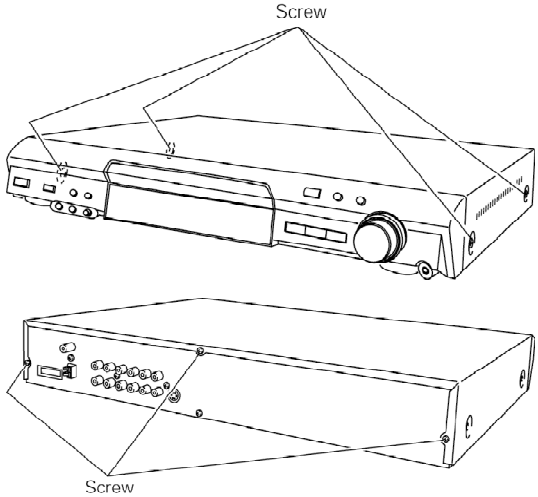

Step 2 Lift up and remove the top cabinet.

12.4. Disassembling the Lid assembly (When taking out disc manually)

- Follow the (Step 1) - (Step 2) of Item 12.3.

Step 1 Separates the gear for drawing out tray from the mechanism unit. It inserts a screw driver in the gear. (The gear jig)
Step 2 Insert the gear jig into the tray open/ close hole.
Step 3 Turn the gear jig counterclockwise to open the tray.
Note : Do not use force to push the tray backwards as it can damage the mechanism unit. / Turn the gear jig clockwise to return tray.

PDF created with pdfFactory Pro trial version www.pdffactory.com

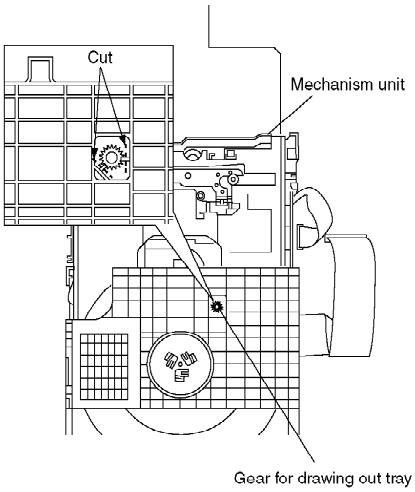

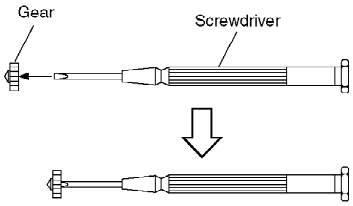

<Gear jig>

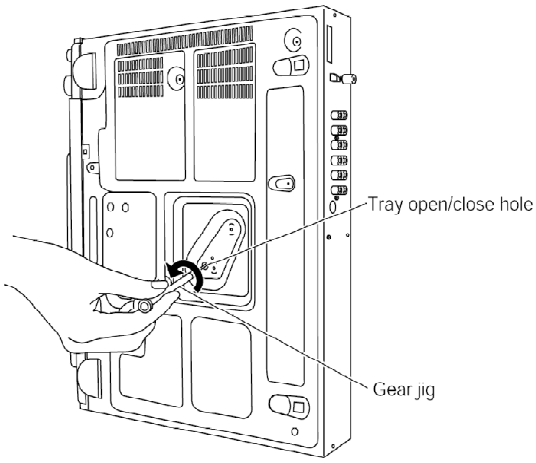

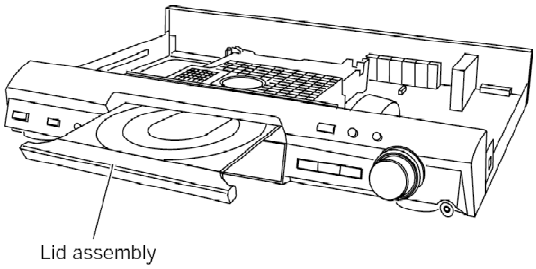

12.5. Disassembling the Front Panel

- Follow the (Step 1) - (Step 2) of Item 12.3.

- Follow the (Step 1) - (Step 3) of Item 12.4.

Step 1 Remove the lid assembly from the tray section.

Step 2 Detach FFC cables at connectors. (CN2008, CN2009)

PDF created with pdfFactory Pro trial version www.pdffactory.com

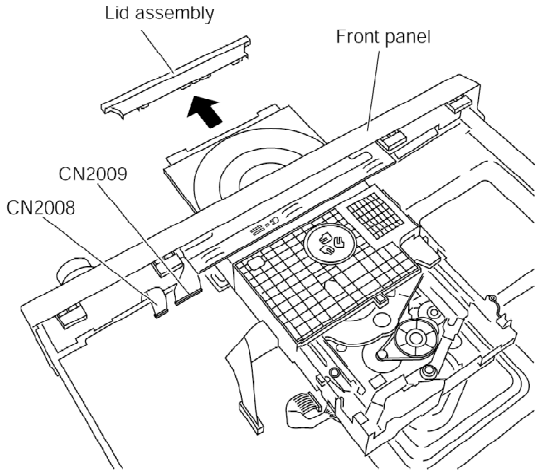

Step 3 Release the tabs.

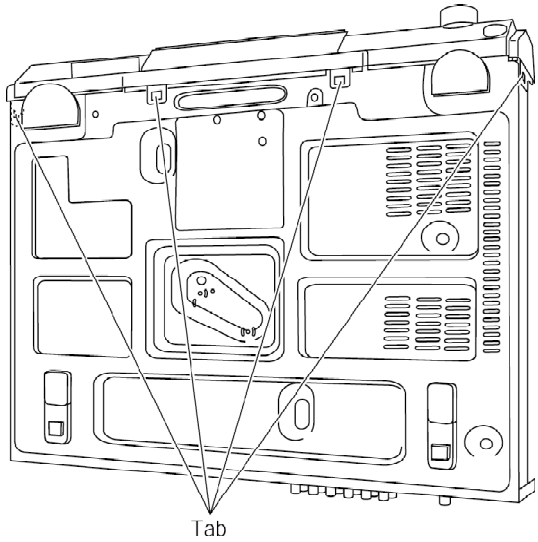

Step 4 Lift up the front panel to remove it.

12.6. Disassembling the FL P.C.B., Volume P.C.B. and MIC P.C.B.[For GC/GS only]

- Follow the (Step 1) - (Step 2) of Item 12.3.

- Follow the (Step 1) - (Step 3) of Item 12.4.

- Follow the (Step 1) - (Step 4) of Item 12.5.

Step 1 Remove the volume knob and mic knob[For GC/GS only].

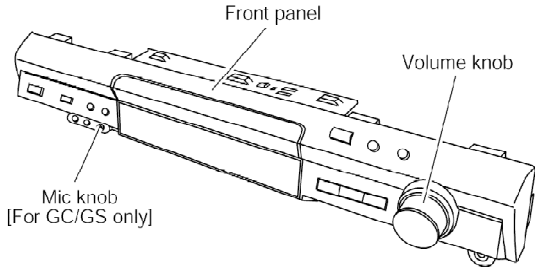

Step 2 Unscrew the screws.

Step 3 Remove the front angle.

PDF created with pdfFactory Pro trial version www.pdffactory.com

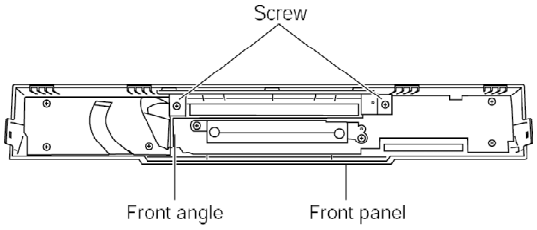

Step 4 Unscrew the screws.

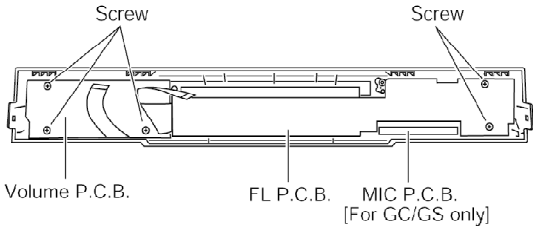

12.7. Disassembling the DVD mechanism Unit

- Follow the (Step 1) - (Step 2) of Item 12.3.

- Follow the (Step 1) - (Step 3) of Item 12.4.

- Follow the (Step 1) - (Step 4) of Item 12.5.

Step 1 Turn the gear jig clockwise to close the tray.

Step 2 Unscrew the screws.

Step 3 Detach FFC cable at connectors. (CN2004, H2000).

Step 4 Lift up the mechanism unit vertically.

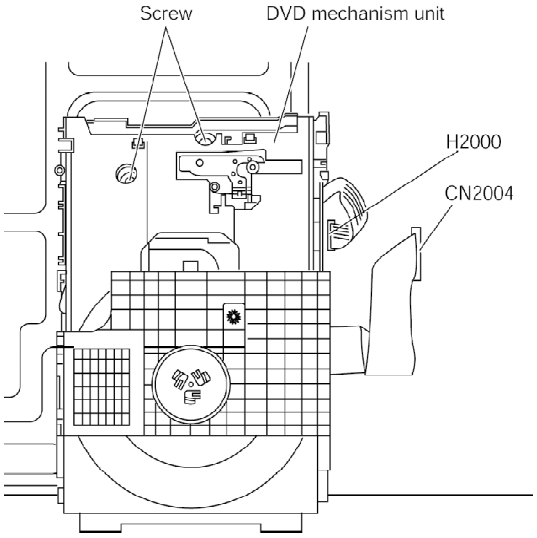

12.8. Disassembling the DVD Module P.C.B.

- Follow the (Step 1) - (Step 2) of Item 12.3.

- Follow the (Step 1) - (Step 3) of Item 12.4.

- Follow the (Step 1) - (Step 4) of Item 12.5.

- Follow the (Step 1) - (Step 4) of Item 12.7.

Step 1 Unscrew the screws.

Step 2 Detach FFC cable at the connectors.(FP8201, FP8501)

PDF created with pdfFactory Pro trial version www.pdffactory.com

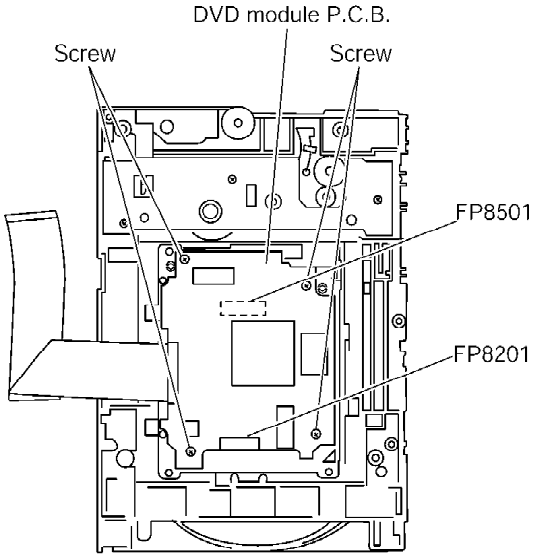

<Mechanism unit bottom>

12.9. Disassembling the Rear panel

- Follow the (Step 1) - (Step 2) of Item 12.3.

Step 1 Unscrew the screws.

Step 2 Release the tabs.

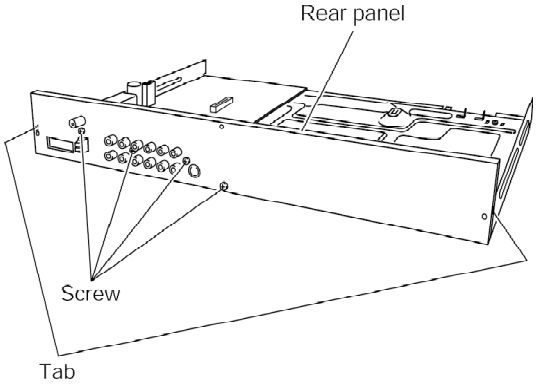

12.10. Disassembling Main P.C.B.

- Follow the (Step 1) - (Step 2) of Item 12.3.

- Follow the (Step 1) - (Step 3) of Item 12.4.

- Follow the (Step 1) - (Step 4) of Item 12.5.

- Follow the (Step 1) - (Step 4) of Item 12.7.

- Follow the (Step 1) - (Step 2) of Item 12.9.

Step 1 Unscrew the screws.

PDF created with pdfFactory Pro trial version www.pdffactory.com

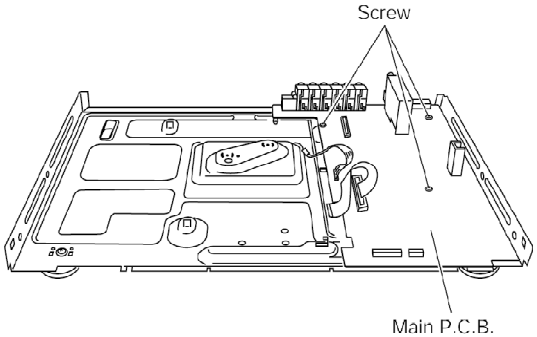

12.11. Service Position

12.11.1. Servicing position of the DVD Module P.C.B.

- Follow the (Step 1) - (Step 2) of Item 12.3.
- Follow the (Step 1) - (Step 3) of Item 12.4.
- Follow the (Step 1) - (Step 4) of Item 12.5.
- Follow the (Step 1) - (Step 4) of Item 12.7.
- Follow the (Step 1) of Item 12.8.
- Follow the (Step 1) - (Step 2) of Item 12.9.

Step 1 Connect FFC cabel at connector. (CN2008, CN2009)
Step 2 Turn Mechanism unit to vertically position.

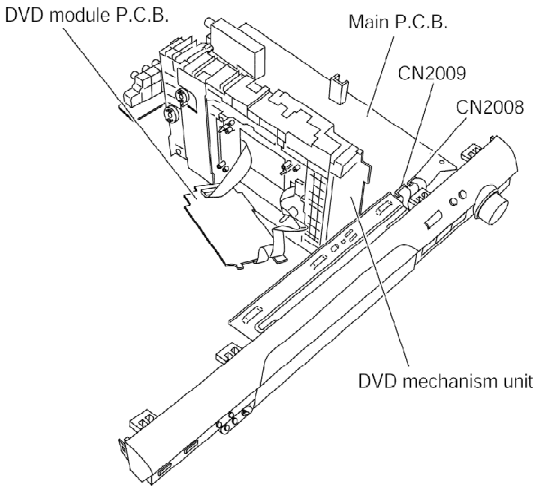

12.11.2. Servicing position of the Main P.C.B.

- Follow the (Step 1) - (Step 2) of Item 12.3.
- Follow the (Step 1) - (Step 3) of Item 12.4.
- Follow the (Step 1) - (Step 4) of Item 12.5.
- Follow the (Step 1) - (Step 4) of Item 12.7.
- Follow the (Step 1) of Item 12.8.
- Follow the (Step 1) - (Step 2) of Item 12.9.

Step 1 Connect FFC cabel at connector. (CN2008, CN2009)
Step 2 Turn Main P.C.B to vertically position.

PDF created with pdfFactory Pro trial version www.pdffactory.com

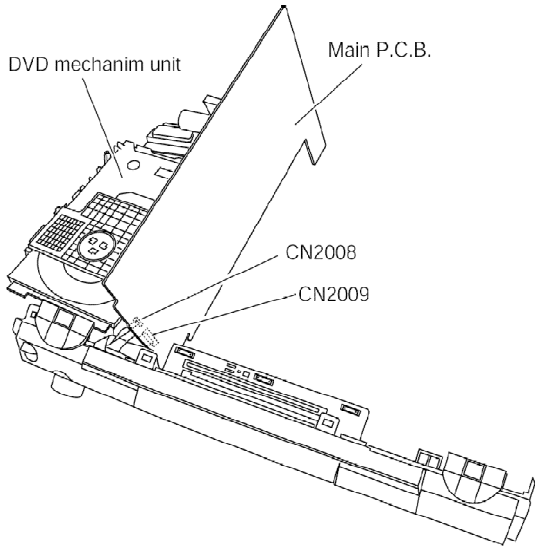

13. Assembling and disassembling the DVD mechanism Unit

13.1. Disassembly Procedure

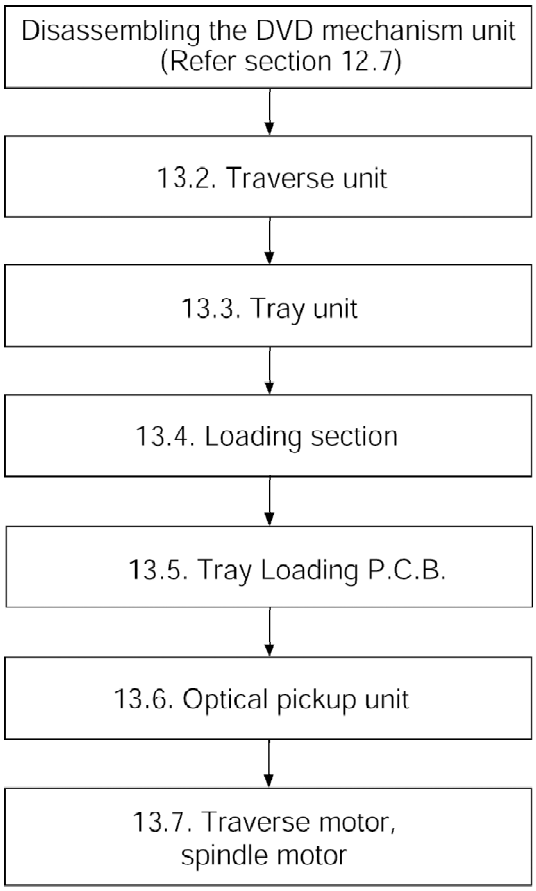

13.2. Traverse Unit

1. Slide the lever (A) in the arrow direction (to the opposite side) till

PDF created with pdfFactory Pro trial version www.pdffactory.com

it stops.

2. Slide the lever (A) further by bending the tab at the right side of the lever A in the right direction. (The right groove opens and the boss becomes seen.)
3. Open the lever (B) to left. (The 2 grooves at the left side open.)

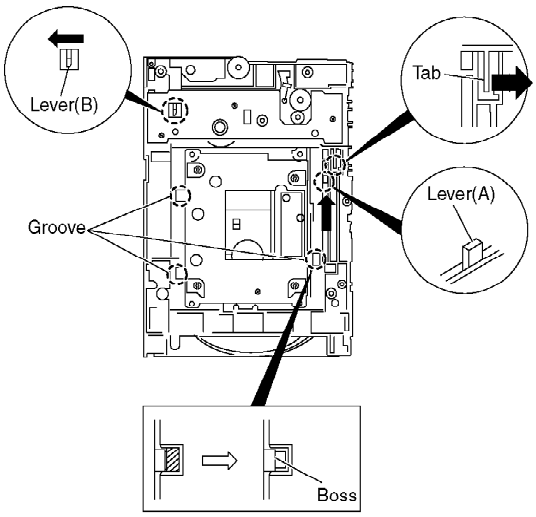

4. Remove the traverse unit

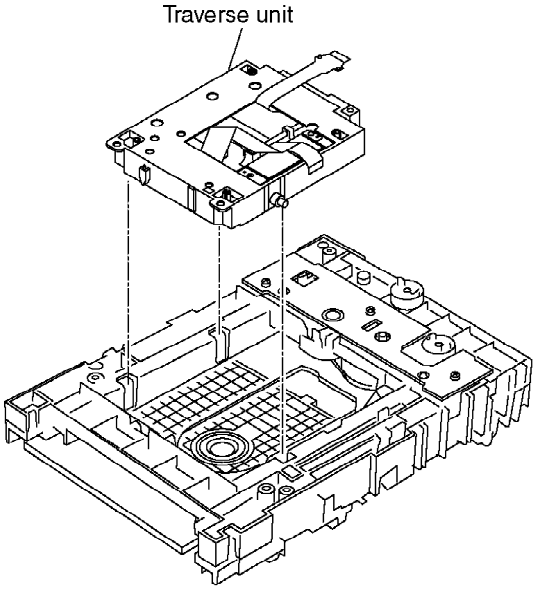

13.3. Tray Unit

1. Slide the guide tray unit while pressing the stopper in the arrow direction, and remove the guide tray unit.

PDF created with pdfFactory Pro trial version www.pdffactory.com

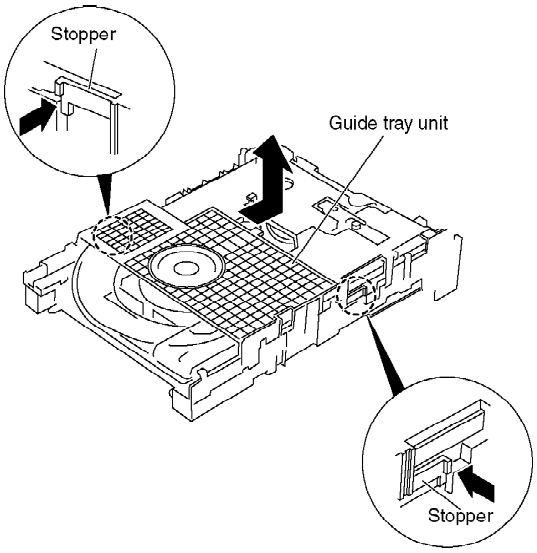

2. **Raise the loading unit.**
3. **Slide the lever in the arrow direction till it stops and pull the tray out.**

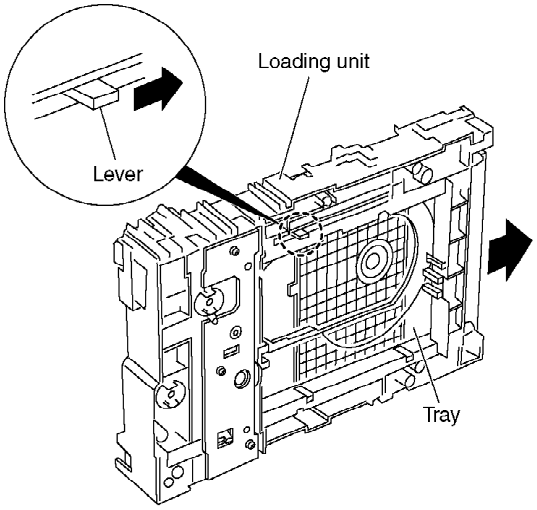

4. **Spread the tabs at the both sides and pull the tray out. (The tray slides a little forward and stops.)**

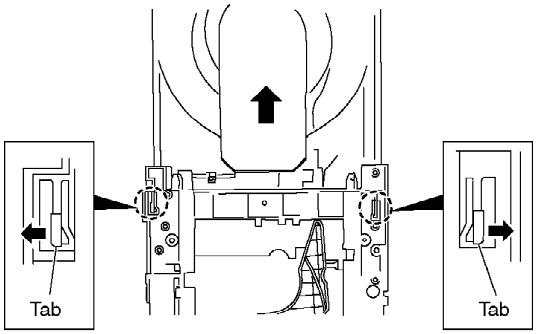

5. **Remove the drive arm concave phase from the tray slider and tray.**

PDF created with pdfFactory Pro trial version www.pdffactory.com

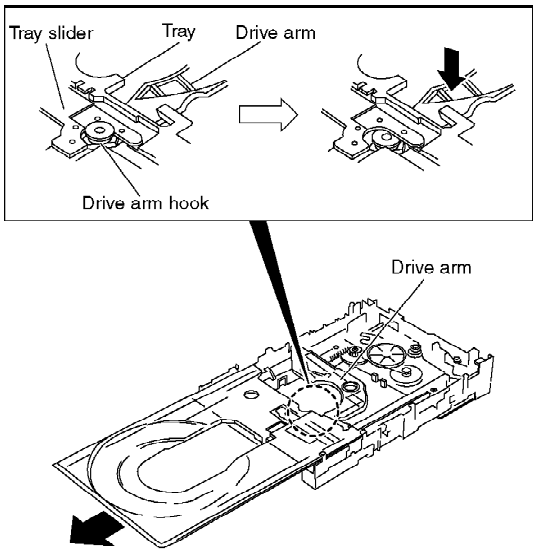

<Assembling the tray unit>

1. **Insert a part of the tray into the unit sliding over the groove on the mechanical chassis unit.**
2. **Insert the tray to the point before the tab of the mechanical chassis unit.**

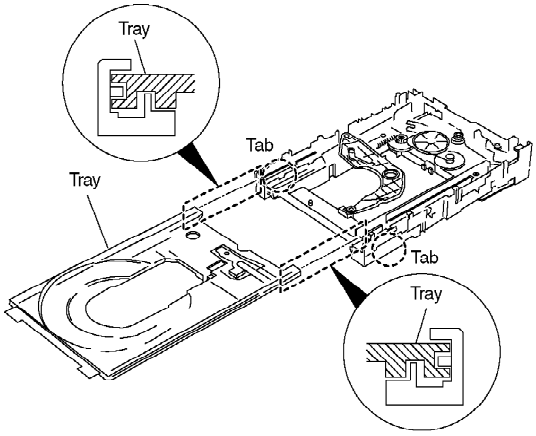

3. **Hook the drive arm concave phase over the tray and the tray slider.**
4. **Press in the tray.**
5. **Make sure that the tray and the drive arm move smoothly.**

PDF created with pdfFactory Pro trial version www.pdffactory.com

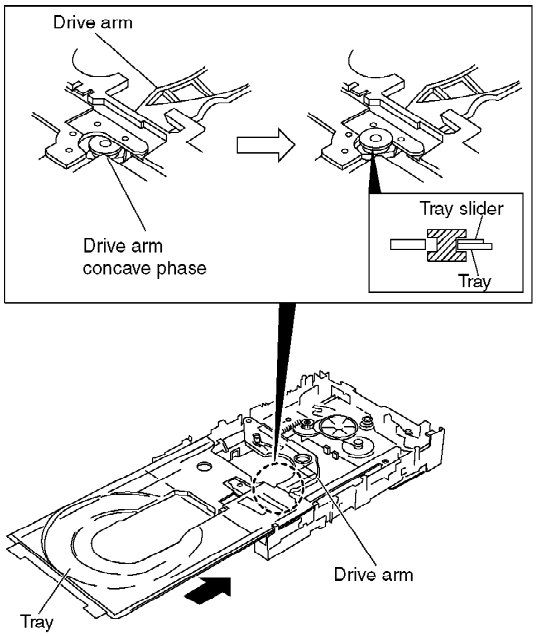

13.4. Loading section

1. Spread the tabs at the both sides and push out the drive arm shaft.

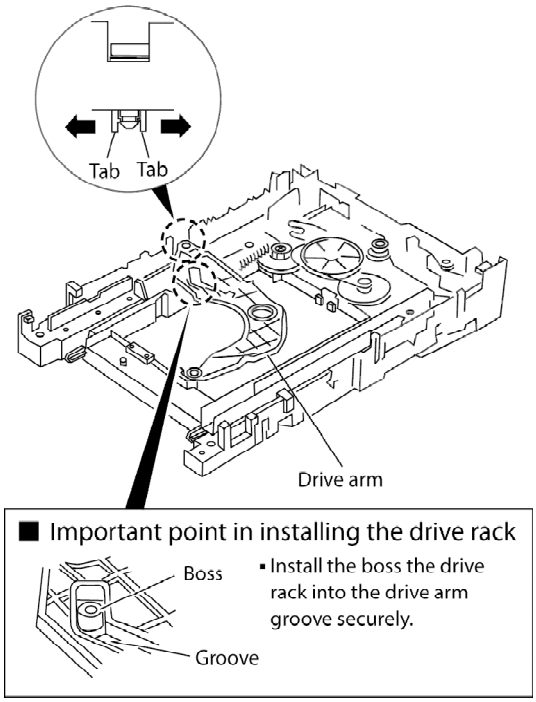

2. Hook the lock lever spring on the lock lever projection part temporarily.

3. Unlock the tab and remove the lock lever.

PDF created with pdfFactory Pro trial version www.pdffactory.com

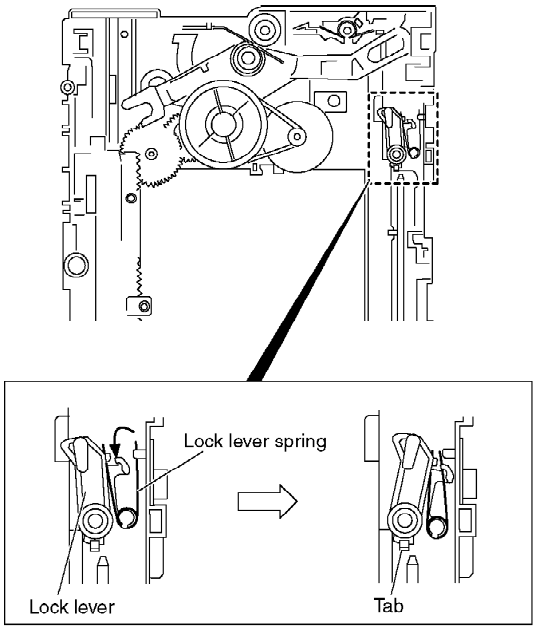

4. **Remove the belt.**
5. **Unlock the tab and remove the pulley.**
6. **Remove the relay gear.**

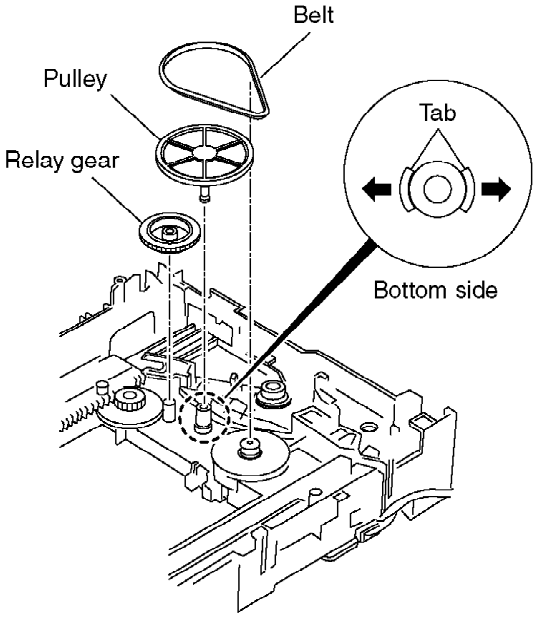

7. **Turn the change lever in the arrow direction till it stops.**
8. **Hook the change lever spring on the change lever project part temporarily.**

PDF created with pdfFactory Pro trial version www.pdffactory.com

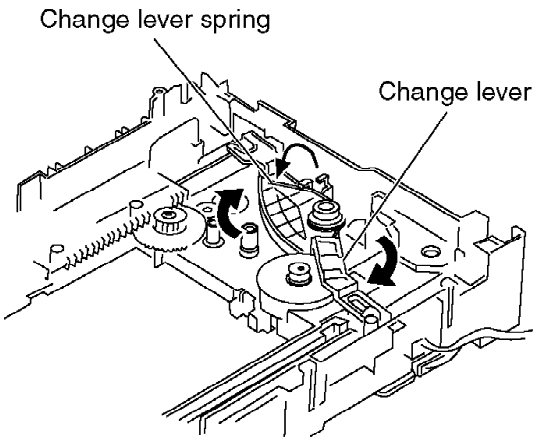

9. Pull the lever (B) in the bottom side to your side and remove the change lever.

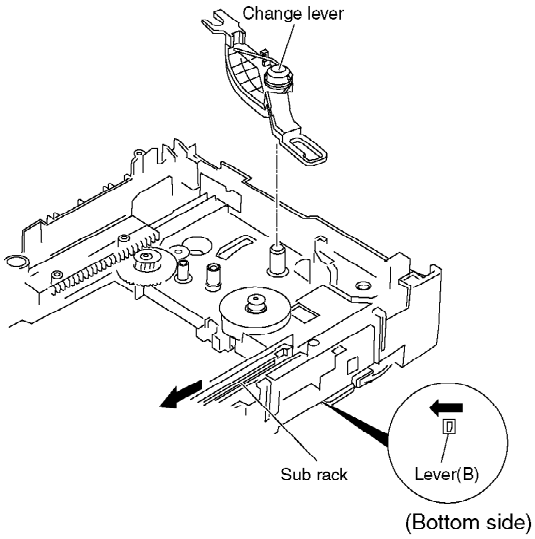

10. Remove the drive rack, the sub rack and the drive gear.

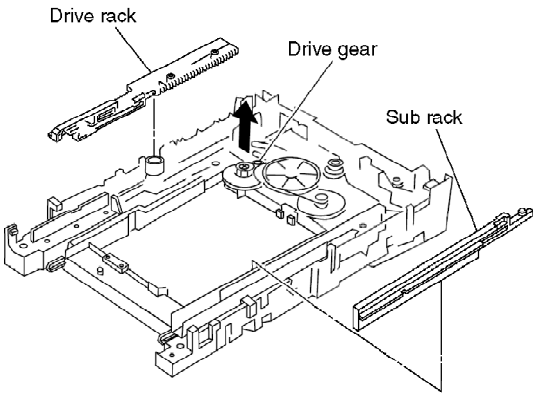

13.5. Tray Loading P.C.B.

1. Unscrew the screws

PDF created with pdfFactory Pro trial version www.pdffactory.com

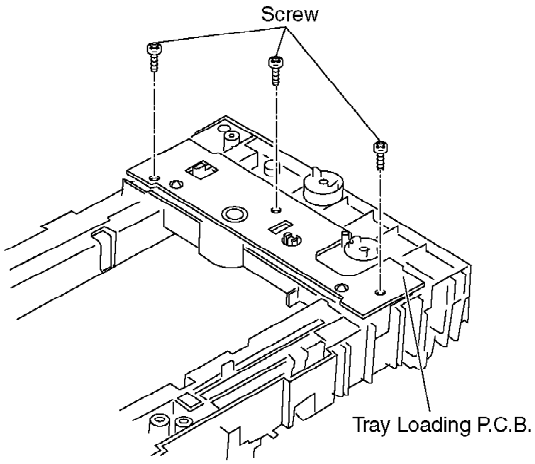

13.6. Optical Pickup Unit

13.6.1. Procedure for Disassembling the Optical Pickup Unit

1. Spread the tabs to push in the pin.

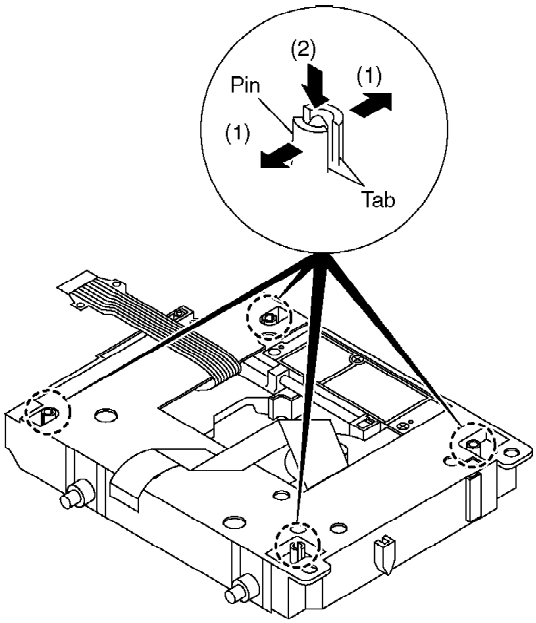

2. Remove the pins.

PDF created with pdfFactory Pro trial version www.pdffactory.com

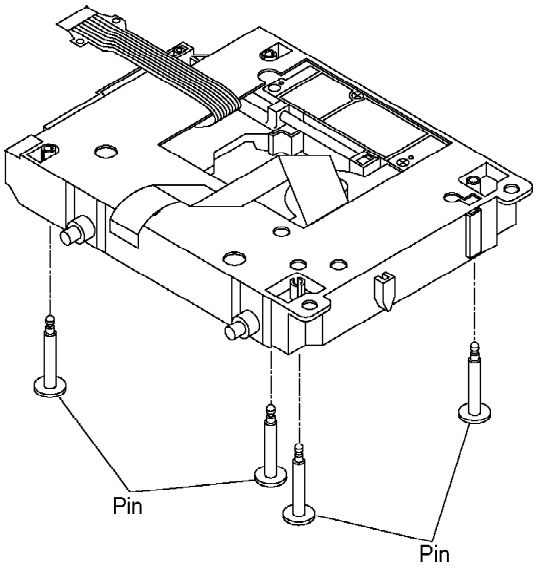

3. Remove the traverse deck.

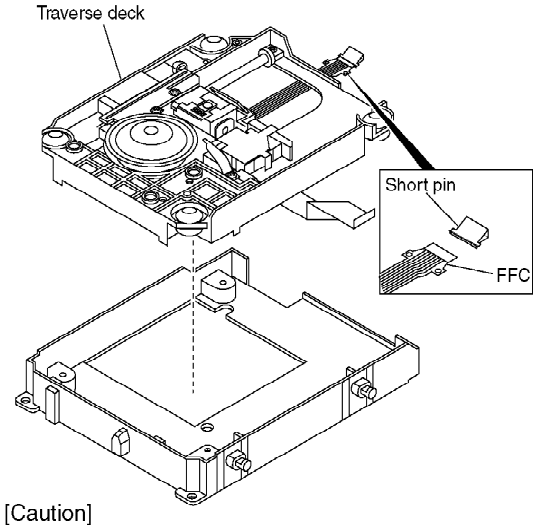

[Caution]
Insert the short pin into the FFC of the optical pickup unit.
[See "Caution to be taken in handling the optical pickup unit"]

4. Move the optical pickup unit in the arrow direction till it stops.

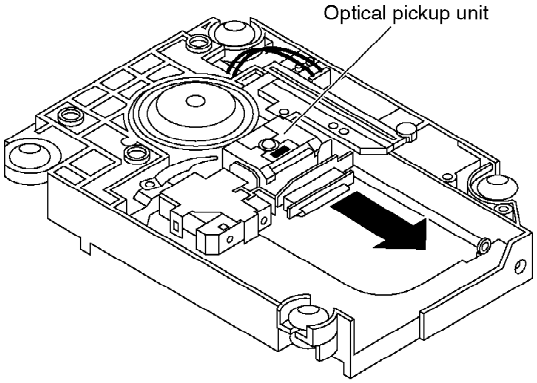

5. Unscrew the screws.

PDF created with pdfFactory Pro trial version www.pdffactory.com

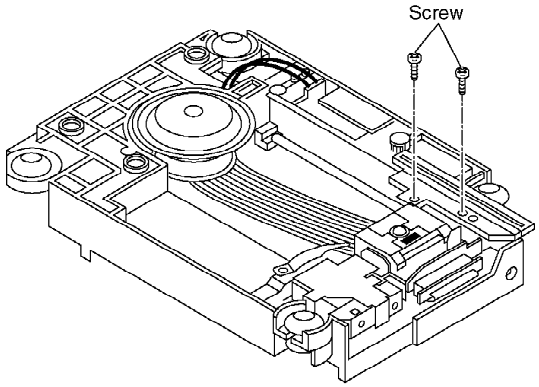

6. Remove the drive rack.

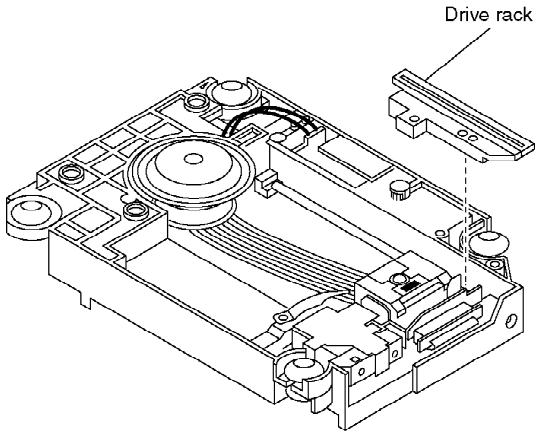

7. Unscrew the screw

8. Slide the shaft in the arrow direction.

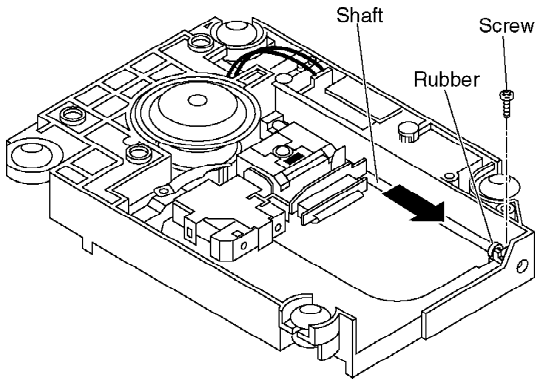

9. Lift the optical pickup unit with the shaft.

PDF created with pdfFactory Pro trial version www.pdffactory.com

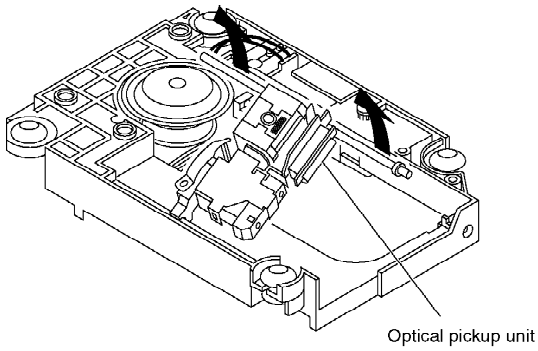

10. Remove the optical pickup unit.

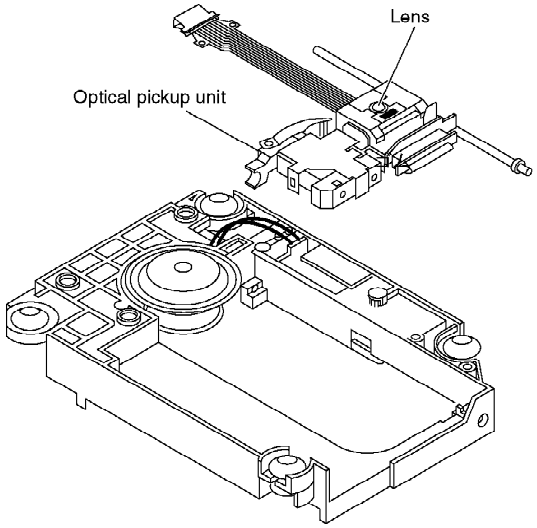

[Caution]

1. Do not give a considerable shock to the optical pickup unit as it has an extremely high-precise structure.
2. Do not touch the lens in the optical pickup unit.

11. Pull the shaft and the rubber out.

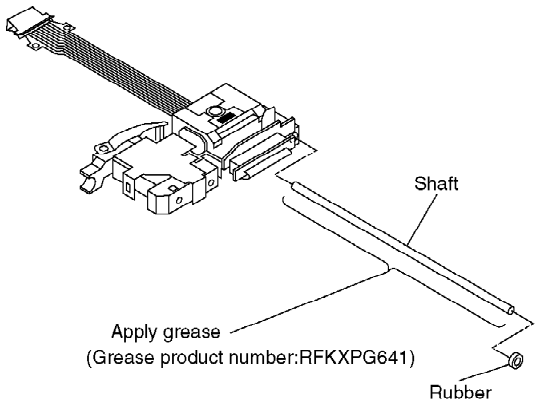

<Assembling the optical pickup unit>

1. Pass the intermediate FPC through the frame hole.

2. Align the guide section of the optical pickup unit with the rail.

PDF created with pdfFactory Pro trial version www.pdffactory.com

3. Install the shaft top to the holder.

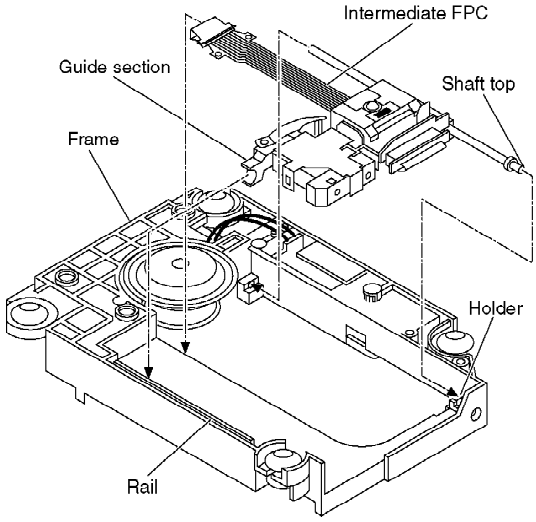

13.7. Traverse Motor and Spindle Motor

1. Unscrew the screws.

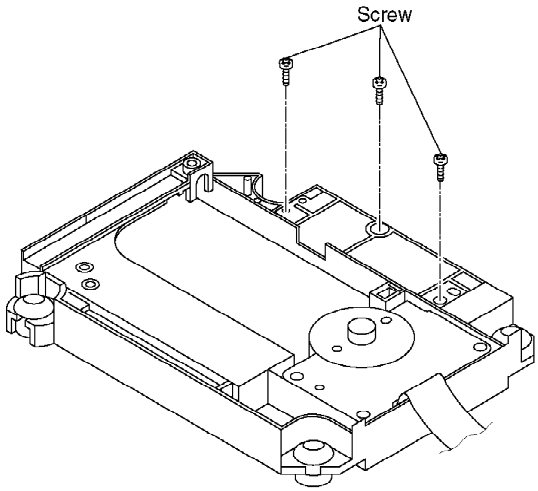

2. Remove the cover while lifting the inner gear.

PDF created with pdfFactory Pro trial version www.pdffactory.com

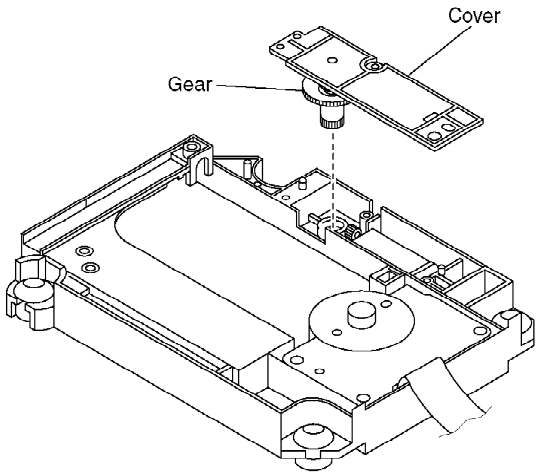

3. Remove the solders.

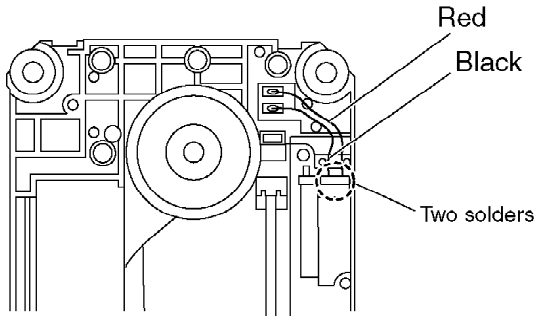

4. Remove the traverse motor.

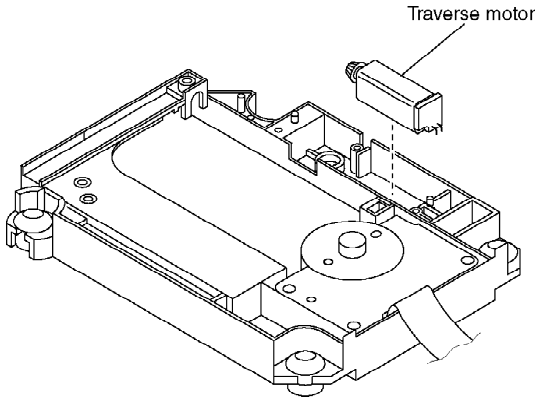

5. Remove the solders.

6. Remove the screw lock as carefully as you can.

PDF created with pdfFactory Pro trial version www.pdffactory.com

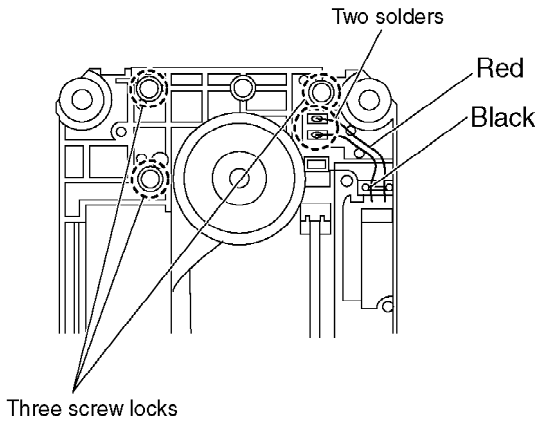

7. Unscrew the screws with torx screw driver (T6).

8. Remove the spindle motor.

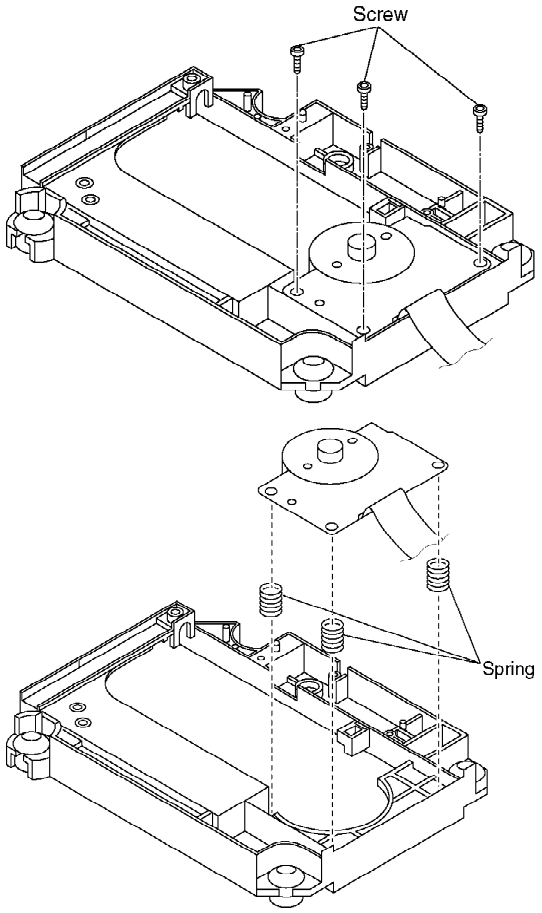

[Caution]
The three springs are removed at the same time when the spindle motor is removed. Use caution not to lose them.

14. Optical Pick-up Self-Diagnosis and Replacement Procedure

14.1. Optical Pickup Breakdown Diagnosis

PDF created with pdfFactory Pro trial version www.pdffactory.com

The optical pickup self-diagnosis function and tilt adjustment check function have been included in this unit. When repairing, use the following procedure for effective Self-diagnosis and tilt adjustment. Be sure to use the self-diagnosis function before replacing the optical pickup when "NO DISC" is displayed. As a guideline, you should replace the optical pickup when the value of the laser drive current is more than 55.

Note:
Press the power button to turn on the power, and check the value within three minutes before the unit warms up. (Otherwise, the result will be incorrect.)

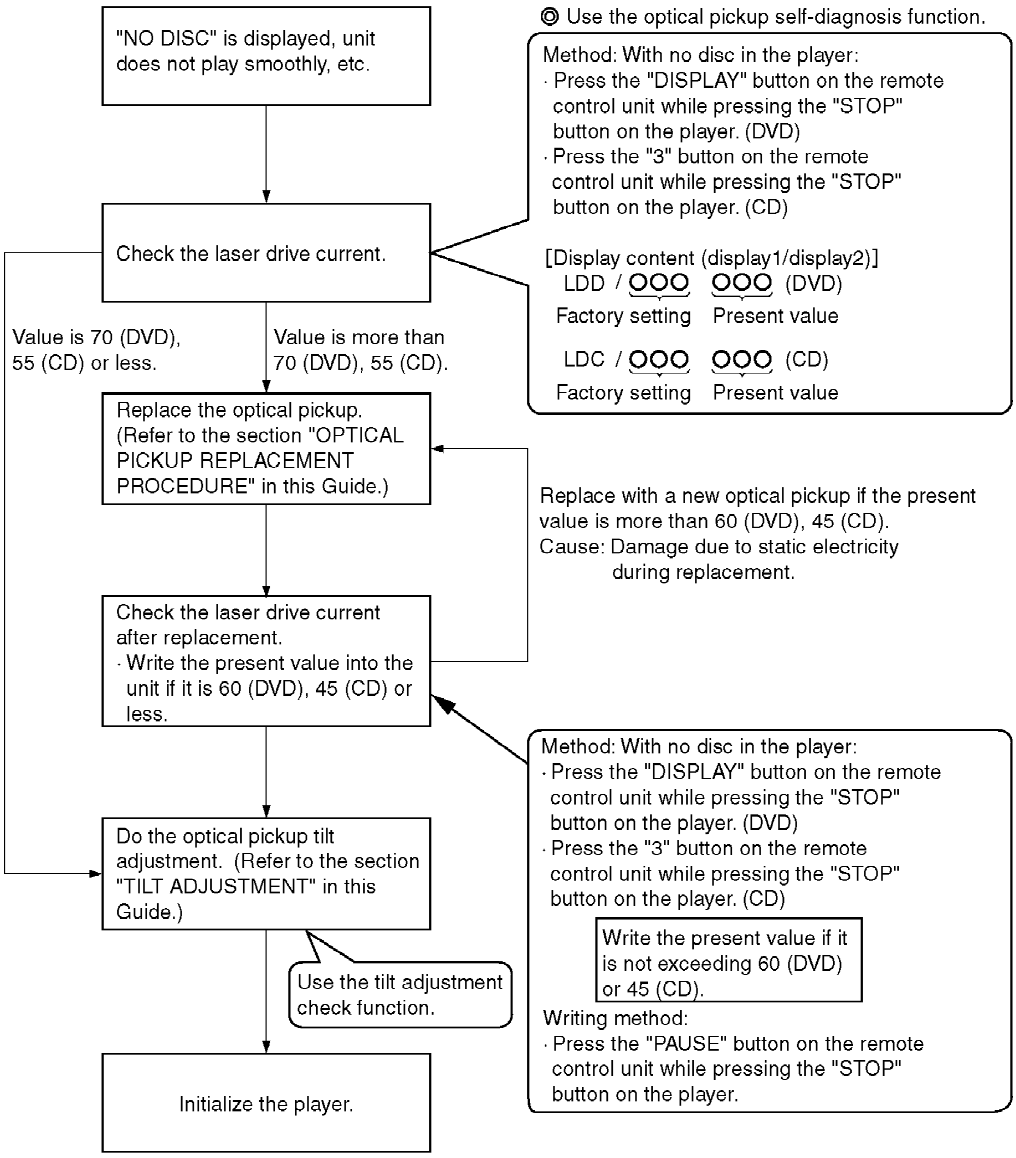

14.2. Service Mode Table 1

The service modes can be activated by pressing various button combination on the player and remote control unit.

PDF created with pdfFactory Pro trial version www.pdffactory.com

Player buttons	Remote control unit buttons	Application	N
STOP	0	Error code display	(Refer to "14.3. DV Diagnos Functior Code").
	5	Tilt adjustment	Refer to "17.4. O adjustm
	6	Area number and broadcasting system check	
	7	Built-in program version check	
	DISPLAY	DVD laser drive current check	Refer to "14.1. O Pickup Breakdo Diagnos
	3	CD laser drive current check	
	PAUSE	Writing of laser drive current value after replacement of optical pickup (Do use this function only when optical pickup is replaced.)	
	≧10	Initialization of the player (factory setting is restored.) Used after replacement of micro-computer and its peripherals and printed circuit board.	

14.3. DVD Self Diagnostic Function-Error Code

Error Code	Error Content	Additional error explanation
	U, H error	
U11	Focus error	
H01	Tray loading error	
H02	Spindle servo error	(Spindle servo, DSC (IC8271) SP motor, CLV servo error)
H03	Traverse servo error	(Traverse motor, IC8251)
H04	Tracking servo error	
H05	Seek error	
H06	Power error	Cannot switch off the power because of the panel and sys computer communication error
H07	Spindle motor drive error	Spindle motor
	DSC related	
F500	DSC error	DSC (IC8271) stops in the occurrence of servo error (startu error, etc.)
F501	DSC not Ready error	DSC-system computer communication error (Communicat caused by idling of DSC)
F502	DSC Time out error	Similar disposal as F500
F503	DSC communication Failure	Communication error (result error occurred although communication command was sent)

PDF created with pdfFactory Pro trial version www.pdffactory.com

Error Code	Error Content	Additional error explanation
F504	Error adjusting DSC data slice offset	
F505	DSC Attention error	Similar disposal as F500
F506	Invalid media	Disc is flipped over, TOC unreadable, incompatible disc m
	ODC related	
F600	Access failure to management information caused by demodulation error	Operation stopped because navigation data is not accessi caused by the demodulation defect
F601	Indeterminate sector ID requested	Operation stopped caused by the request to access abnor data
F602	Access failure to LEAD-IN caused by demodulation error	LEAD IN data unreadable
F603	Access failure to KEYDET caused by demodulation error	Access failure to CSS data of disc
F610	ODC abnormality	No permission for command execution
F611	6626 QCODE don't read Error	Access failure to seek address in CD series
F612	No CRC OK for a specific time	Access failure to ID data in DVD series
F620	Laser safeguard: high temperature condition	
F621	Laser safeguard: circuit failure condition	
F630	No reply to KEY DET enquiry	(for internal use only)
F631	CPPM KEY DET is not available till the FILE terminal	(CPPM file system is unreadable caused by scratches)
F632	CPPM KEY DET is not available	Been revoked or falsified
	Disc code	
F103	Illegal highlight Position	Big possibility of disc specification violation during highli
	HIC Error	
F4FF	Force initialize failure (time out)	
	Micro computer error	
F700	MBX overflow	When replying message to disc manager
F701	Message command does not end	Next message is sent before replying to disc manager
F702	Message command changes	Message is changed before it is sent as a reply to disc ma

PDF created with pdfFactory Pro trial version www.pdffactory.com

Error Code	Error Content	Additional error explanation
F880	Task number is not appropriate	Message coming from a non-existing task
F890	Sending message when message is being sent to AV task	Sending message to AV task
F891	Message couldn't be sent to AV task	Begin sending message to AV task
F893	FROM falsification	
F894	EEPROM abnormality	
F895	Language area abnormality	Firm version agreement check for factory preset setting fa prevention
F896	No existence model	Firm version agreement check for factory preset setting fa prevention
F897	Initialize is not completed	Initialize completion check for factory preset setting failur prevention
F898	Disagreement of hardware and software	Unsuitable combination of AV DECORDER, SDRAM and FI (firmware)
F8A0	Message command is not appropriate	Begin sending message to AV task

Note:

An error code will be canceled if a power supply is turned OFF.
***1: CPPM is the copy guard function beforehand written in the disk for protection of copyrights.**

14.4. Service mode table 2

Pressing various button combinations on the player and remote control unit can activate the service modes.

PDF created with pdfFactory Pro trial version www.pdffactory.com

Item	Player mode and button combination	Function	Display	Cancellation method
Jitter check	In STOP (no disc) mode, press STOP button on the player, and "5" button on the remote control unit.	Jitter check Jitter rate is measured and displayed. Measurement is repeatedly done in the cycle of one second. Read error counter starts from zero upon mode setting. When target block data failed to be read out, the counter advances by one increment. When the failure is caused by minor error, it may be corrected when retried to enable successful reading. In this case, the counter advances by one. When the error persists even after retry, the counter may jump by two or more.	J _xxx/yyy_zz (display1/display2) Focus drive value Read error counter Jitter rate Jitter check mode Jitter rate is shown in decimal notation to one place of decimal. Focus drive value is shown in hexadecimal notation.	Press STOP or OPEN button.
Error code check	In STOP (no disc) mode, press STOP button on the player, and "0" button on the remote control unit. * With pointing of cursor up and down on display	Error code check The latest error code stored in EEPROM is displayed.	Error code (play_err) is expressed in the following convention. Error code = 0 x DAXX is expressed: → DVDnn UXX Error code = 0 x DBXX is expressed: → DVDnn HXX Error code = 0 x DXXX is expressed: → DVDnn FXXX Error code = 0 x 0000 is expressed: → DVDnn F--- * "xx" denotes the error code.	Cancelled automatically 5 seconds later.
Initial setting of laser drive current	In STOP (no disc) mode, press STOP button on the player, and PAUSE button on the remote control unit.	Initial setting of laser drive currentInitial current value for each of DVD laser and CD laser is separately saved in EEPROM.	LDO_/034_028 (display1/display2) CD laser current measurement DVD laser current measurement Laser current measurement mode The value denotes the current in decimal notation. The above example shows the initial current is 34mA and 28mA for DVD laser and CD laser respectively when the laser is switched on.	Cancelled automatically 5 seconds later.
DVD laser drive current measurement	In STOP (no disc) mode, press STOP button on the player, and DISPLAY button on the remote control unit.	DVD laser drive current measurement ·DVD laser drive current is measured and the result is displayed together with the initial value stored in EEPROM. After the measurement, DVD laser emission is kept on. It is turned off when POWER key is switched off. (It is also turned off when POWER button on the player is switched off.)	LDD_/034_032 (display1/display2) Measured current Initial current stored in EEPROM DVD laser current measurement mode The value denotes the current in decimal notation. The above example shows the initial current is 34mA and the measured value is 32mA.	Cancelled automatically 5 seconds later.
ADSC internal RAM data check	In STOP (no disc) mode, press STOP button on the player, and "1" button on the remote control unit.	ADSC internal RAM data check ·ADSC internal RAM data is read out and displayed.	OFA_6901 RAM data for specified address Address The value is shown in hexadecimal notation. The above example shows the data in ADSC address OFAh is 6901h.	Press STOP or PLAY button.
CD laser drive current measurement	In STOP (no disc) mode, press STOP button on the player, and "3" button on the remote control unit.	CD laser drive current measurement CD laser drive current is measured and the result is displayed together with the initial value stored in EEPROM. After the measurement, CD laser emission is kept on. It is turned off when POWER key is switched off. (It is also turned off when POWER button on the player is switched off.)	LDC_/028_026 (display1/display2) Measured current Initial current stored in EEPROM CD laser current measurement mode The value denotes the current in decimal notation. The above example shows the initial current is 28mA and the measured value is 26mA.	Cancelled automatically 5 seconds later.

PDF created with pdfFactory Pro trial version www.pdffactory.com

Item	Player mode and button combination	Function	Display	Cancellation method
Version display	In STOP (no disc) mode, press STOP button on the player, and "7" button on the remote control unit.	Version display	srrr/xxyzzz (display1/display2) System controller release number System controller model number System controller generation Panel controller release number Panel controller model number	Cancelled automatically 5 seconds later.
Initialization	In STOP (no disc) mode, press STOP button on the player , and ≥10 button on the remote control unit.	Initialization User settings are cancelled and player is initialized to factory setting.	--INIT--	———
Region display	In STOP (no disc) mode, press STOP button on the player, and "6" button on the remote control unit.	Region display	w__xy__zzz Panel controller jumper information N: NTSC / 6: PAL60 N: noPAL / P: PAL Region No.	Cancelled automatically 5 seconds later.
Region and syscon version display	In STOP (no disc) mode, press STOP button on the player, and "8" button on the remote control unit.	Region and syscon display	w_xxyzzz System controller version Destination System controller generation Region	Cancelled automatically 5 seconds later.
Communication error display	In STOP (no disc) mode, press STOP button on the player, and "MENU" button on the remote control unit.	Displays frequency of communication errors between system control IC and mechanism control IC during DVD module.	ER_02_30	Cancelled automatically 5 seconds later.

Item	Player mode and button combination	Function	Display	Cancellation method
Timer 1 check	In STOP (no disc) mode, press STOP button on the player, and "▲" button on the remote control unit.	Timer 1 check Laser operation timer Operation time is measured separately for DVD laser and CD laser.	T1_1234/5678 (display1/display2) Shown to the left is DVD laser time, and to the right CD laser time. Time is shown in 4 digits of decimal notation in a unit of 10 hours. "0000" will follow "9999".	Cancelled automatically 5 seconds later.
Timer 1 reset	While displaying Timer 1 data, press STOP button on the "▼" button on the remote control unit.	Timer 1 reset Laser operation timer Operation time of both DVD laser and CD laser is reset all at once.	T1_0000/0000 (display1/display2)	Cancelled automatically 5 seconds later.
Timer 2 check	In STOP (no disc) mode, press STOP button on the player, and " ▶ " button on the remote control unit.	Timer 2 check Spindle motor operation timer	T2_12345 Time is shown in 5 digits of decimal notation in a unit of 10 hours. "00000" will follow "99999".	Cancelled automatically 5 seconds later.
Timer 2 reset	While displaying Timer 2 data, press STOP button on the player and " ◀ " button on the remote control unit.	Timer 2 reset Spindle motor operation timer	T2_00000	Cancelled automatically 5 seconds later.

14.5. Sales demonstration lock function

This function prevents discs from being lost when the unit is used for sales demonstrations by disabling the disc eject function. "LOCKED" is displayed on the unit, and ordinary operation is disabled.

14.5.1. Setting

- Prohibiting removal of disc

1. **Select the DVD/CD function.**
2. **Press and hold down the ■ button on the player and the power button on the remote controller unit for at least three seconds. (The message, "___LOCKED_" appears when the function is activated.)**

Note:

PDF created with pdfFactory Pro trial version www.pdffactory.com

OPEN/CLOSE button is invalid and the player displays “___LOCKED_” while the lock function mode is entered.

- Prohibiting operation of selector and disk

1. **Select the DVD/CD function.**
2. **Press and hold down the button on the player and the power button on the remote controller unit for at least three seconds. (The message, “___LOCKED_” appears when the function is activated.)**

Note:
The following buttons are invalid and the player displays “___LOCKED_” while the lock function mode is entered.

Player	, , , SELECTOR, , , VOLUME KNOB,
Remote controller unit	SLEEP, REPEAT, 0~9, ≧10, RETURN, TOP MENU, , , , , , , , POSITION MEMORY, TUNER/BAND, D.MIX, CH SELECT/ TEST, SET UP/ MUTING, DISPLAY, GROUP, TV, VCR/ AUX, QUICK REPLAY, SUBTITLE, FL DISPLAY, CH & VOLUME

14.5.2. Cancellation

The lock can be cancelled by the same procedure as used in setting. ("UNLOCK" is displayed on cancellation. Disconnecting the power cable from power outlet does not cancel the lock.)

14.6. Handling After Completing Repairs

Use the following procedure after completing repairs.

14.6.1. Method

Confirm that the power is turned on:

1. **Press the "OPEN/CLOSE" button to close the tray.**
2. **Press the "POWER" button to turn off the power.**
3. **Disconnect the power plug from the outlet.**

14.6.2. Precautions

Do not disconnect the power plug from the outlet with the tray still open, then close the tray manually.

PDF created with pdfFactory Pro trial version www.pdffactory.com

15. Self-Diagnosis Function

15.1. Automatic Displayed Error / Codes

15.1.1. Automatic Display Function

For a power unit error, the code is automatically displayed.

F61:

Automatically displayed on the LCD of the player.

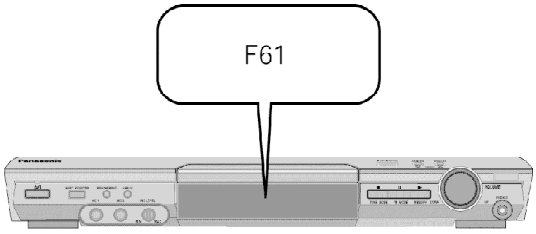

15.1.2. Re-Display

- For F61 Display

- When the code, F61 is displayed, the power is automatically turned off.

- The code, F61 is displayed for three seconds, and then the current time appears.

- To retrieve the code, turn on the power button so that the code F61 appears, however, is switched to time display after three seconds, and the power is automatically turned off.

15.1.3. Description of Error Code

15.1.3.1. F61

- State, Condition

When the power is turned on, the unit is automatically turned off. The power does not turn on.

- Cause, Troubleshooting

Power circuit system failure and/or direct current flown to speaker terminal / Identify the cause and replace with new parts.

15.2. Memorized Error Codes

15.2.1. Activating Self-Diagnosis Function and Displaying Method

1. Turn on the power.

2. Select DVD/CD function. With no DVD/CD inserted in the player, press and hold down the ■ button simultaneously for at least

PDF created with pdfFactory Pro trial version www.pdffactory.com

two seconds, and press the F_SKIP button for at least two seconds in order to display “T_____”.

3. Press the button. If a memorized error is detected, the result of self diagnosis is displayed. (Ex.: T H15)(See table below) / If several errors are detected, press the button to display each.

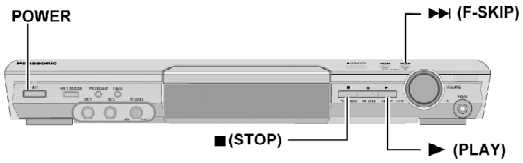

15.2.2. Re-Display

- Press the power button to turn off the power, and then turn on the power.
- The details of self diagnosis are stored in the unit memory. / To retrieve them, follow the procedure described the above, “Activating Self-Diagnosis Function and Displaying Method”.

15.2.3. Deleting Details of Self Diagnosis

- After repair, press and hold down the button for at least five seconds, “_ CLEAR __” appears for a second and then “T_____” appears. (Deleting the details of self diagnosis)
- After repairing errors, be sure to delete the details of self diagnosis.

Error Code	State, Condition	Cause, Troubleshooting
H15	The disc tray cannot be opened: it closes spontaneously.	Disc tray open/close detection switch (S S902) failure. / (Check and replace)
H16	The disc tray cannot be closed: it opens spontaneously.	

16. Service Precautions

16.1. Recovery after the DVD player is repaired

- When FLASH ROM IC or DVD module P.C.B. is replaced, carry out the recovery processing to optimize the drive.
  Playback the recovery disk to process the recovery automatically.
- Recovery disc (Product number: RFKZD03R005)
- Performing recovery

PDF created with pdfFactory Pro trial version www.pdffactory.com

1. Load the recovery disc RFKZD03R005 on to the player and run it.
2. Recovery is performed automatically. When it is finished, a message appears on the screen.
3. Remove the recovery disc.
4. Turn off the power.

Note:
This unit requires no initialization process carried out after the traditional DVD players were repaired.
When the recovery measures are taken, the customer setting will return to the factory setting as same as the procedure described in item of "Initialization" in 14.4. is carried out. Write down the contents of the setting before recovery processing, and reset the player.

16.2. Firmware version-up of the DVD player

- The firmware of the DVD player may be renewed to improve the quality including operability and playability to the substandard discs.processing to optimize the drive.
  The recovery disc has also firmware version-up.
- After version-up, recovery processing is executed automatically.
- Part number of the recovery disc for version-up will be noticed when it is supplied.
- Updating firmware

1. Load the recovery disc that is supplied to the player and run it.
2. Firmware version of the player is automatically checked. Appropriate message appears whenever necessary.
3. Using remote controller's cursor key, select whether version updating is to be done or not. (Selection of Yes/No)
4. a. If Yes is selected, version updating is performed.
   b. If No is selected, only recovery is performed.
5. a. When updating is finished, remove the disc according to the message appearing on the screen.
   b. Remove the disc according to the message appearing on the screen.
6. Turn off the power.

Note:
If the AC power supply is shut out during version-up due to a power failure, the version-up is improperly carried out.
In such a case, replace the FLASH ROM IC and carry out the version-up again.

PDF created with pdfFactory Pro trial version www.pdffactory.com

17. Adjustment Procedure

17.1. Service Tools and Equipment

Application	Name	Number
Tilt adjustment	DVD test disc	DVDT-S20 [SPG]
	TORX screw driver (T6)	Available on sales route. (T6) or RFKZ0185 [SPG]
Others	Grease	RFKXPG641
	Harnal	VFK1784 [SPG]
	Drysurf	RFKXGUD24
Confirmation	CD test disc	PVCD-K06 or any other commercially available disc
	VCD test disc	PVCD-K06 or any other commercially available disc
	Recovery disc	RFKZD03R005 [SPG]

17.2. Important points in adjustment

17.2.1. Important points in optical adjustment

- Before starting optical adjustment, be sure to take anti-static measures.
- Optical pickup tilt adjustment is needed after replacement of the following components.

1. Optical pickup unit
2. Spindle motor unit
3. Optical pickup peripheral parts (such as rail)

Notes
Adjustment is generally unnecessary after replacing other parts of the traverse unit. However, make adjustment if there is a noticeable degradation in picture quality. Optical adjustments cannot be made inside the optical pickup. Adjustment is generally unnecessary after replacing the traverse unit.

17.2.2. Important points in electrical adjustment

- Follow the adjustment procedures described in this Manual.

17.3. Storing and Handling Test Discs

- Surface precision is vital for DVD test discs. Be sure to store and handle them carefully.

PDF created with pdfFactory Pro trial version www.pdffactory.com

1. Do not place discs directly onto the workbench, etc., after use.
2. Handle discs carefully in order to maintain their flatness. Place them into their case after use and store them vertically. Store discs in a cool place where they are not exposed to direct sunlight or air from air conditioners.
3. Accurate adjustment will not be possible if the disc is warped when placed on a surface made of glass, etc. If this happens, use a new test disc to make optical adjustments.
4. If adjustment is done using a warped disc, the adjustment will be incorrect and some discs will not be playable.

17.4. Optical adjustment

17.4.1. Optical pickup tilt adjustment

Measurement point	Adjustment point	Mode	Disc
	Tangential adjustment screw Tilt adjustment screw	T01 (inner periphery) play T30 (center periphery) play T43 (outer periphery) play	DVDT-S20 [SPG]
Measuring equipment		Adjustment value	
None (Main unit display for servicing is used.)		Adjust to the minimum jitter value.	

17.4.1.1. Adjustment procedure

1. While pressing STOP button on the main unit, press "5" on the remote control unit.
2. Confirm that "J_xxx/yyy_zz" (display1/display2) is shown on the front display.

For your information:
"yyy" and "zz" shown to the right have nothing to do with the jitter value. "yyy" is the error counter, while "zz" is the focus drive value.

Note:
Jitter value appears on the front display.

3. Play test disc T30 (center periphery).
4. Adjust tangential adjustment screw so that the jitter value is

PDF created with pdfFactory Pro trial version www.pdffactory.com

minimized.

5. Play test disc T30 (center periphery).
6. Adjust tilt adjustment screw 1 so that the jitter value is minimized.
7. Play test disc T30 (center periphery).
8. Adjust tilt adjustment screw 2 so that the jitter value is minimized.
9. Repeat adjusting tilt adjustment screws 1 and 2 alternately until the jitter value is minimized.

17.4.1.2. Important points

1. Make tangential adjustment first, and then make tilt adjustment.
2. Repeat adjusting two or three times to find the optimum point.
3. Finish the procedure with tilt adjustment.

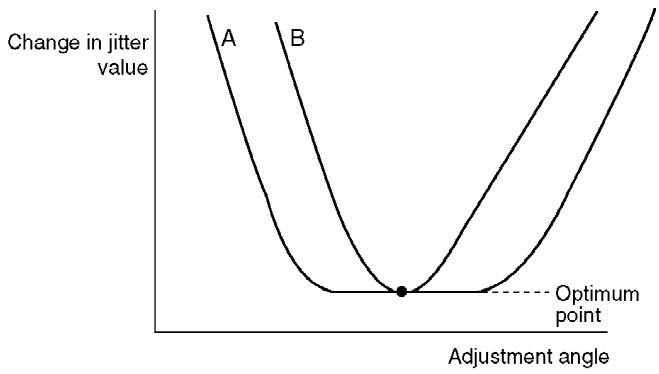

Jitter value depends on the model:

1. If the jitter value changes like B, the optimum point is easy to find.
2. If the jitter value changes like A, set the optimum point near the middle.

PDF created with pdfFactory Pro trial version www.pdffactory.com

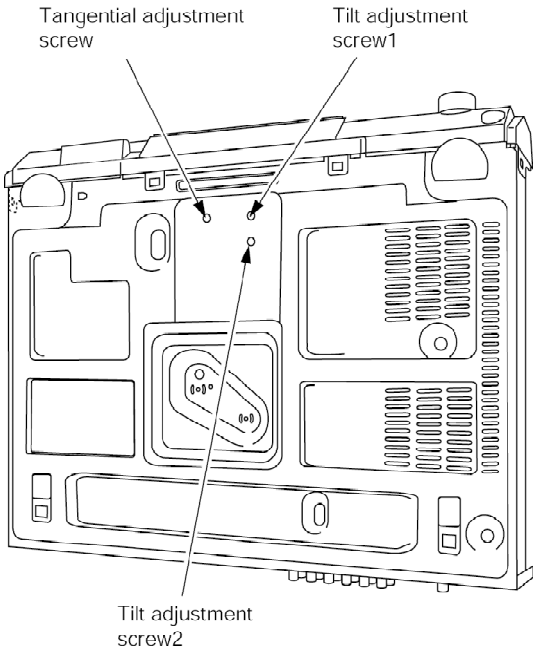

17.4.1.3. Check after adjustment

Play test disc or any other disc to make sure there is no picture degradation in the inner, middle and outer peripheries, and no audio skipping. After adjustment is finished, lock each adjustment screw in position using screw lock.

17.4.1.4. Procedure for screw lock

1. **After adjustment, remove top cover, tray, clamper base and traverse unit in this sequence.**
2. **Lay the traverse unit upside down, and fix adjustment screw with screw lock.**
3. **After fixing, reassemble traverse unit, clamper base, tray and top cover.**

PDF created with pdfFactory Pro trial version www.pdffactory.com

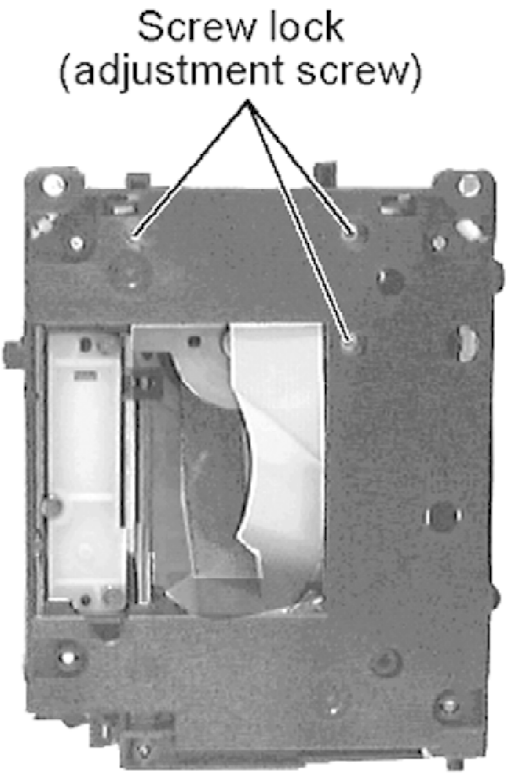

18. Abbreviations

INITIAL/LOGO		ABBREVIATIONS
A	A0~UP	ADDRESS
	ACLK	AUDIO CLOCK
	AD0~UP	ADDRESS BUS
	ADATA	AUDIO PES PACKET DATA
	ALE	ADDRESS LATCH ENABLE
	AMUTE	AUDIO MUTE
	AREQ	AUDIO PES PACKET REQUEST
	ARF	
	ASI	AUDIO RF
	ASO	SERVO AMP INVERTED INPUT
	ASYNC	SERVO AMP OUTPUT
		AUDIO WORD DISTINCTION SYNC
B	BCK	BIT CLOCK (PCM)
	BCKIN	BIT CLOCK INPUT
	BDO	BLACK DROP OUT
	BLKCK	SUB CODE BLOCK CLOCK
	BOTTOM	CAP. FOR BOTTOM HOLD
	BYP	BYPATH
	BYTCK	BYTE CLOCK

PDF created with pdfFactory Pro trial version www.pdffactory.com

INITIAL/LOGO		ABBREVIATIONS
C	CAV	CONSTANT ANGULAR VELOCITY
	CBDO	CAP. BLACK DROP OUT
	CD	COMPACT DISC
	CDSCK	CD SERIAL DATA CLOCK
	CDSRDATA	CD SERIAL DATA
	CDRF	CD RF (EFM) SIGNAL
	CDV	COMPACT DISC-VIDEO
	CHNDATA	CHANNEL DATA
	CKSL	SYSTEM CLOCK SELECT
	CLV	CONSTANT LINEAR VELOCITY
	COFTR	CAP. OFF TRACK
	CPA	CPU ADDRESS
	CPCS	CPU CHIP SELECT
	CPDT	CPU DATA
	CPUADR	CPU ADDRESS LATCH
	CPUADT	CPU ADDRESS DATA BUS
	CPUIRQ	CPU INTERRUPT REQUEST
	CPRD	CPU READ ENABLE
	CPWR	CPU WRITE ENABLE
	CS	CHIP SELECT
	CSYNCIN	COMPOSITE SYNC IN
	CSYNCOUT	COMPOSITE SYNC OUT
D	DACCK	D/A CONVERTER CLOCK
	DEEMP	DEEMPHASIS BIT ON/OFF
	DEMPH	DEEMPHASIS SWITCHING
	DIG0~UP	FL DIGIT OUTPUT
	DIN	DATA INPUT
	DMSRCK	DM SERIAL DATA READ CLOCK
	DMUTE	DIGITAL MUTE CONTROL
	DO	DROP OUT
	DOUT0~UP	DATA OUTPUT
	DRF	DATA SLICE RF (BIAS)
	DRPOUT	DROP OUT SIGNAL
	DREQ	DATA REQUEST
	DRESP	DATA RESPONSE
	DSC	DIGITAL SERVO CONTROLLER
	DSLF	DATA SLICE LOOP FILTER
	DVD	DIGITAL VIDEO DISC

PDF created with pdfFactory Pro trial version www.pdffactory.com

INITIAL/LOGO		ABBREVIATIONS
E	EC	ERROR TORQUE CONTROL
	ECR	ERROR TORQUE CONTROL REFERENCE
	ENCSEL	ENCODER SELECT
	ETMCLK	EXTERNAL M CLOCK (81MHz/ 40.5MHz)
	ETSCLK	EXTERNAL S CLOCK (54MHz)
F	FBAL	FOCUS BALANCE
	FCLK	FRAME CLOCK
	FE	FOCUS ERROR
	FFI	FOCUS ERROR AMP INVERTED INPUT
	FEO	FOCUS ERROR AMP OUTPUT
	FG	FREQUENCY GENERATOR
	FSC	FREQUENCY SUB CARRIER
	FSCK	FS (384 OVER SAMPLING) CLOCK
G	GND	COMMON GROUNDING (EARTH)
H	HA0~UP	HOST ADDRESS
	HD0~UP	HOST DATA
	HINT	HOST INTERRUPT
	HRXW	HOST READ/WRITE
I	IECOUT	IEC958 FORMAT DATA OUTPUT
	IPFRAG	INTERPOLATION FLAG
	IREF	I (CURRENT) REFERENCE
	ISEL	INTERFACE MODE SELECT
L	LDON	LASER DIODE CONTROL
	LPC	LASER POWER CONTROL
	LRCK	L CH/R CH DISTINCTION CLOCK

PDF created with pdfFactory Pro trial version www.pdffactory.com

INITIAL/LOGO		ABBREVIATIONS
M	MA0~UP	MEMORY ADDRESS
	MCK	MEMORY CLOCK
	MCKI	MEMORY CLOCK INPUT
	MCLK	MEMORY SERIAL COMMAND CLOCK
	MDATA	MEMORY SERIAL COMMAND DATA
	MDQ0~UP	MEMORY DATA INPUT/OUTPUT
	MDQM	MEMORY DATA I/O MASK
	MLD	MEMORY SERIAL COMMAND LOAD
	MPEG	MOVING PICTURE EXPERTS GROUP
O	ODC	OPTICAL DISC CONTROLLER
	OFTR	OFF TRACKING
	OSCI	OSCILLATOR INPUT
	OSCO	OSCILLATOR OUTPUT
	OSD	ON SCREEN DISPLAY
P	P1~UP	PORT
	PCD	CD TRACKING PHASE DIFFERENCE
	PCK	PLL CLOCK
	PDVD	DVD TRACKING PHASE DIFFERENCE
	PEAK	CAP. FOR PEAK HOLD
	PLLCLK /	CHANNEL PLL CLOCK
	PLLOK	PLL LOCK
	PWMCTL	PWM OUTPUT CONTROL
	PWMDA	PULSE WAVE MOTOR DRIVE A
	PWMOA, B	PULSE WAVE MOTOR OUT A, B

PDF created with pdfFactory Pro trial version www.pdffactory.com

INITIAL/LOGO		ABBREVIATIONS
R	RE	READ ENABLE
	RFENV	RF ENVELOPE
	RFO	RF PHASE DIFFERENCE
	RS	OUTPUT
	RSEL	(CD-ROM) REGISTER SELECT
	RST	RF POLARITY SELECT
	RSV	RESET
		RESERVE
S	SBI0, 1	SERIAL DATA INPUT
	SBO0	SERIAL DATA OUTPUT
	SBT0, 1	SERIAL CLOCK
	SCK	SERIAL DATA CLOCK
	SCKR	AUDIO SERIAL CLOCK
	SCL	RECEIVER
	SCLK	SERIAL CLOCK
	SDA	SERIAL CLOCK
	SEG0~UP	SERIAL DATA
	SELCLK	FL SEGMENT OUTPUT
	SEN	SELECT CLOCK
	SIN1, 2	SERIAL PORT ENABLE
	SOUT1, 2	SERIAL DATA IN
	SPDI	SERIAL DATA OUT
	SPDO	SERIAL PORT DATA INPUT
	SPEN	SERIAL PORT DATA OUTPUT
	SPRCLK	SERIAL PORT R/W ENABLE
	SPWCLK	SERIAL PORT READ CLOCK
	SQCK	SERIAL PORT WRITE CLOCK
	SQCX	SUB CODE Q CLOCK
	SRDATA	SUB CODE Q DATA READ
	SRMADR	CLOCK
	SRMDT0~7	SERIAL DATA
		SRAM ADDRESS BUS
	SS	SRAM DATA BUS 0~7
	STAT	START/STOP
	STCLK	STATUS
	STD0~UP	STREAM DATA CLOCK
	STENABLE	STREAM DATA
		STREAM DATA INPUT ENABLE
	STSEL	STREAM DATA POLARITY
	STVALID	SELECT
	SUBC	STREAM DATA VALIDITY
	SBCK	SUB CODE SERIAL
	SUBQ	SUB CODE CLOCK
	SYSCLK	SUB CODE Q DATA

PDF created with pdfFactory Pro trial version www.pdffactory.com

	SYSTCLK	SYSTEM CLOCK

INITIAL/LOGO		ABBREVIATIONS
T	TE	TRACKING ERROR
	TIBAL	BALANCE CONTROL
	TID	BALANCE OUTPUT 1
	TIN	BALANCE INPUT
	TIP	BALANCE INPUT
	TIS	BALANCE OUTPUT 2
	TPSN	OP AMP INPUT
	TPSO	OP AMP OUTPUT
	TPSP	OP AMP INVERTED INPUT
	TRCRS	TRACK CROSS SIGNAL
	TRON	TRACKING ON
	TRSON	TRAVERSE SERVO ON

INITIAL/LOGO		ABBREVIATIONS
V	VBLANK	V BLANKING
	VCC	COLLECTOR POWER SUPPLY VOLTAGE
	VCDCONT	VIDEO CD CONTROL (TRACKING BALANCE)
	VDD	DRAIN POWER SUPPLY VOLTAGE
	VFB	VIDEO FEED BACK
	VREF	VOLTAGE REFERENCE
	VSS	SOURCE POWER SUPPLY VOLTAGE
W	WAIT	BUS CYCLE WAIT
	WDCK	WORD CLOCK
	WEH	WRITE ENABLE HIGH
	WSR	WORD SELECT RECEIVER

PDF created with pdfFactory Pro trial version www.pdffactory.com

INITIAL/LOGO		ABBREVIATIONS
X	X	X' TAL
	XALE	X ADDRESS LATCH ENABLE
	XAREQ	X AUDIO DATA REQUEST
	XCDROM	X CD ROM CHIP SELECT
	XCS	X CHIP SELECT
	XCSYNC	X COMPOSITE SYNC
	XDS	X DATA STROBE
	XHSYNCO	X HORIZONTAL SYNC OUTPUT
	XHINT	XH INTERRUPT REQUEST
	XI	X' TAL OSCILLATOR INPUT
	XINT	X INTERRUPT
	XMW	X MEMORY WRITE ENABLE
	XO	X' TAL OSCILLATOR OUTPUT
	XRE	X READ ENABLE
	XSRMCE	X SRAM CHIP ENABLE
	XSRMOE	X SRAM OUTPUT ENABLE
	XSRMWE	X SRAM WRITE ENABLE
	XVCS	X V-DEC CHIP SELECT
	XVDS	X V-DEC CONTROL BUS
	XVSYNCO	STROBE
		X VERTICAL SYNC OUTPUT

19. Voltage Chart

19.1. DVD Module P.C.B.

19.2. Main P.C.B.

19.3. FL P.C.B. & MIC P.C.B[For GC/GS only] & Tray Loading P.C.B.

20. Wave Form Chart

21. Schematic Diagram Notes

- This schematic diagram may be modified at any time with the development of new technology.

Notes:

S901:

Play detection switch.

S902:

Open detection switch.

S6000:

PDF created with pdfFactory Pro trial version www.pdffactory.com

Tray open / close switch (Open / Close).

S6001:

F. skip, search and Tuning switch (/ / TUNING).

S6002:

R. skip, search and Tuning switch (/ / TUNING).

S6003:

Stop and Tune mode / FM mode switch (TUNE MODE / FM MODE).

S6004:

Pause and FM mode switch (FM MODE).

S6005:

Play and memory switch (Memory).

S6011:

Standby / on switch ( ).

S6012:

Source select switch (INPUT SELECTOR).

S6013:

Progressive switch.

S6014:

Harmonic out switch.

VR6000:

volume control.

VR6001:

Main mic..

- Indicated voltage values are the standard values for the unit measured by the DC electronic circuit tester (high-impedance) with the chassis taken as standard. Therefore, there may exist

PDF created with pdfFactory Pro trial version www.pdffactory.com

some errors in the voltage values, depending on the internal impedance of the DC circuit tester.

- Important safety notice:
  Components identified by ⚠ mark have special characteristics important for safety.
  Furthermore, special parts which have purposes of fire-retardant (resistors), high-quality sound (capacitors), low-noise (resistors), etc. are used.
  When replacing any of components, be sure to use only manufacturer´s specified parts shown in the parts list.
- The supply part number is described alone in the replacement parts list.
- Voltage and signal line

: +B Signal line

: CD-DA signal line

: Main signal line

: DVD (Video) signal line

: DVD (Audio) signal line

: FM/AM signal line

: -B Signal line

Caution!

IC and LSI are sensitive to static electricity.
Secondary trouble can be prevented by taking care during repair.
Cover the parts boxes made of plastics with aluminum foil.
Ground the soldering iron.

PDF created with pdfFactory Pro trial version www.pdffactory.com

Put a conductive mat on the work table.
Do not touch the legs of IC or LSI with the fingers directly.

22. Block Diagram

23. Schematic Diagram

24. Printed Circuit Board Diagram

25. Wiring Connection Diagram

26. Illustration of IC's, Transistors and Diodes

27. Terminal Function of ICs

27.1. IC2018 (C2CBHG000168): System control

Pin No.	Terminal Name	I/O	Function
1	TRY_ / CLOSE	I	Loading mechanism close SW (L: SW ON)
2	TRAY_CCW	O	Terminal for tray control 1
3	TRAY_CW	O	Terminal for tray control 2
4	TRY_OPEN	I	Loading Mechanism open SW (L: SW ON)
5	N.C	-	Not used, open
6	N.C	-	Not used, open
7	BRAKE_H	O	Terminal for tray control 3
8	BYTE	-	VSS (GND)
9	CNVSS	-	VSS (GND)
10	N.C	-	Not used, open
11	N.C	-	Not used, open
12	RESET	I	System Reset Input
13	XOUT	-	Main Clock Output (10.0 MHZ)
14	VSS	-	GND (0V)
15	XIN	-	Main Clock Input (10.0 MHZ)
16	VCC	-	Power supply (5V)
17	NMI	I	Connect to VCC, External Interrupt I/P
18	RMT	I	Remote control input
19	SYNC	I	AC failure detection input
20	N.C	-	Not used, open
21	DIVX_SEL	I	DivX Model Selection (L = No DivX, H = DivX)

PDF created with pdfFactory Pro trial version www.pdffactory.com

Pin No.	Terminal Name	I/O	Function
22	SPK_EN	I	Speaker Protection (L = Speaker Protect OFF, H = Speaker Protect ON)
23	EDA	I/O	DATA signal for the EEPROM
24	ECK	O	CLOCK signal for the EEPROM
25	ECS	O	LAT signal for the EEPROM
26	N.C	-	Not used, open
27	TUN_SD	I	Station Detection
28	TUN_DO	I	Stereo Detection
29	TUN_CLK	O	Clock for Tuner
30	TUN_DI	O	Data for Tuner
31	Tx	-	Not used
32	Rx	-	Not used
33	CLK	-	Not used
34	MUTE_S	O	Mute signal for surround Audio signal
35	DVD_CMD	O	CMD signal for the DVD Module
36	DVD_STAT	I	STATUS signal from the DVD Module
37	DVD_CLK	I	CLK signal for the DVD Module
38	WIDE1	O	Control Signal for the WIDE function
39	MUT_FRNT	O	Mute signal output for Front speaker
40	MUTE_C	O	Mute signal output for Center speaker
41	EPM	-	Not used
42	MUTE_SUB	O	Mute signal output for Subwoofer
43	HP_MUTE	O	Mute signal output for Headphone
44	DVD_MUTE	I	Signal from DVD module control mute circuit
45	RGB_H	O	Mute signal 1 for video output
46	YC_H	O	Control signal for the video signal Mix
47	MUTE_L	O	MUTE signal for the Line output
48	VOL_DA	O	DATA signal for 6ch VOL ASP

PDF created with pdfFactory Pro trial version www.pdffactory.com

Pin No.	Terminal Name	I/O	Function
49	VOL_CK	O	CLOCK signal for 6ch VOL ASP
50	SCART_ / MUTE	O	Line out for SCART terminal
51	MIC_MUTE	O	Muting circuit for the MIC input
52	SS_DAT	O	DATA Signal for S.SRND IC
53	SS_CLK	O	Clock Signal for S.SRND IC
54	N.C	-	Not used, open
55	HB_MUTE	O	H.Bass Mute
56	HB_LVL	-	Not used, open
57	CMIX	-	Not used, open
58	SURR_FC1	O	Surround Freq. Limiter 1
59	SURR_FC2	-	Not used, open
60	N.C	-	Not used, open
61	N.C	-	Not used, open
62	VCC	-	Power supply 5.0V
63	FAN_CTRL	O	FAN Control output
64	VSS	-	GND (0V)
65	RF_DET	-	Not used, open
66	RF_PCON	-	Not used, open
67	RF_LINK	-	Not used, open
68	DVD_PCNT	O	Control signal for the power for the DVD Module
69	N.C	-	Not used, open
70	PCONT	O	Control Signal for the Power Control Relay
71	MUTE_H	O	HIC Mute
72	DC_DET	I	Signal from the DC Detection circuit
73	RDS_CK	I	Clock signal from the RDS decoder
74	RDS_DAT	I	Data signal from the RDS decoder
75	JOG_B	I	Signal B from Volume JOG
76	JOG_A	I	Signal A from Volume JOG
77	N.C	-	Not used, open
78	N.C	-	Not used, open
79	N.C	-	Not used, open
80	N.C	-	Not used, open
81	FLD_DA	I	Data input for the FL Driver
82	N.C	-	Not used, open

PDF created with pdfFactory Pro trial version www.pdffactory.com

Pin No.	Terminal Name	I/O	Function
83	N.C	-	Not used, open
84	N.C	-	Not used, open
85	N.C	-	Not used, open
86	KEY 3	-	Not used, open
87	FLD_RST	O	Reset signal for the FL driver
88	FLD_CS	O	Latch signal for the FL driver
89	FLD_CK	O	Clock signal for the FL driver
90	N.C	-	Not used, open
91	KEY 2	I	Key 2 line input
92	N.C	-	Not used, open
93	DES3	I	Region setting for DVD
94	MODEL_ / SEL	I	Model selector
95	DES1	I	Region setting for Tuner
96	AVSS	-	Analog power supply input
97	KEY1	I	Key 1 line input
98	VREF	-	Reference voltage input
99	AVCC	-	Analog power supply input
100	N.C	-	Not used, open

28. Parts Location and Replacement Parts List

Notes:
***Important safety notice:**
Components identified by ⚠ mark have special characteristics important for safety. Furthermore, special parts which have purposes of fire-retardant (resistors), high-quality sound (capacitors), low-noise (resistors), etc. are used.
When replacing any of components, be sure to use only manufacture's specified parts shown in the parts list.
***Warning: This product uses a laser diode. Refer to caution statements.**
***Capacity values are in microfarads (μ F) unless specified otherwise, P=Pico-farads (pF), F= Farads (F).**
***Resistance values are in ohms, unless specified otherwise, 1K=1,000 (OHM), 1M=1,000k (OHM).**
***The parenthesized indications in the Remarks columns specify the model names and areas. (Refer to the cover page)**
***The marking (RTL) indicates the retention time is limited for this item. After the discontinuation of this assembly in production, it will no longer be available.**
***Reference for O/I book languages are as follows:**
[En: English, Cn: Chinese, Ar: Arabic]
***[M] indicates in the Remarks columns indicates parts supplied by PAVCSG.**
***[SPG] indicates in the Remarks columns indicates parts supplied by SPG [PAVC].**

PDF created with pdfFactory Pro trial version www.pdffactory.com

28.1. Loading Mechanism, Traverse Unit & Cabinet

28.1.1. Loading Mechanism, Traverse Unit & Cabinet Parts Location

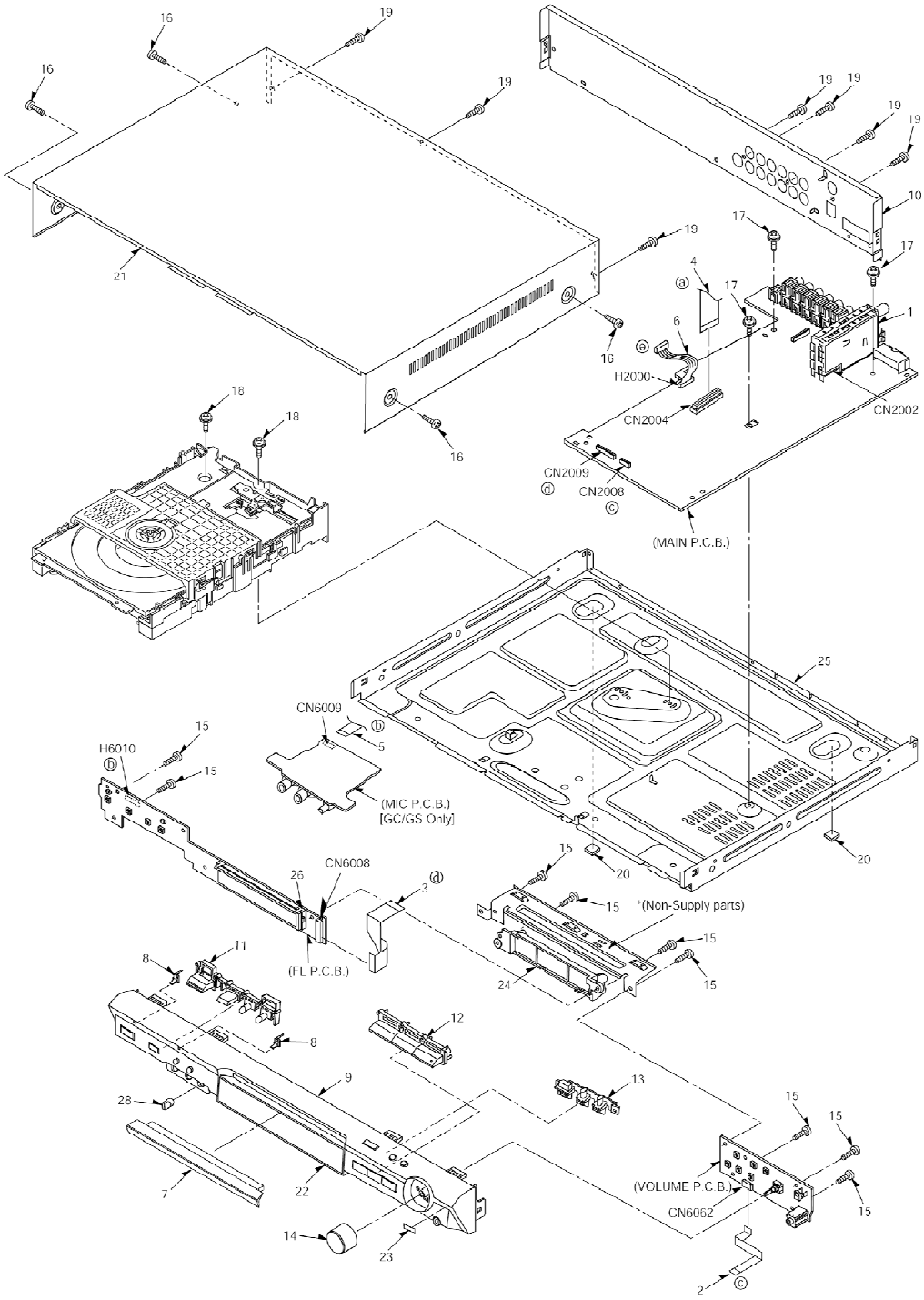

PDF created with pdfFactory Pro trial version www.pdffactory.com

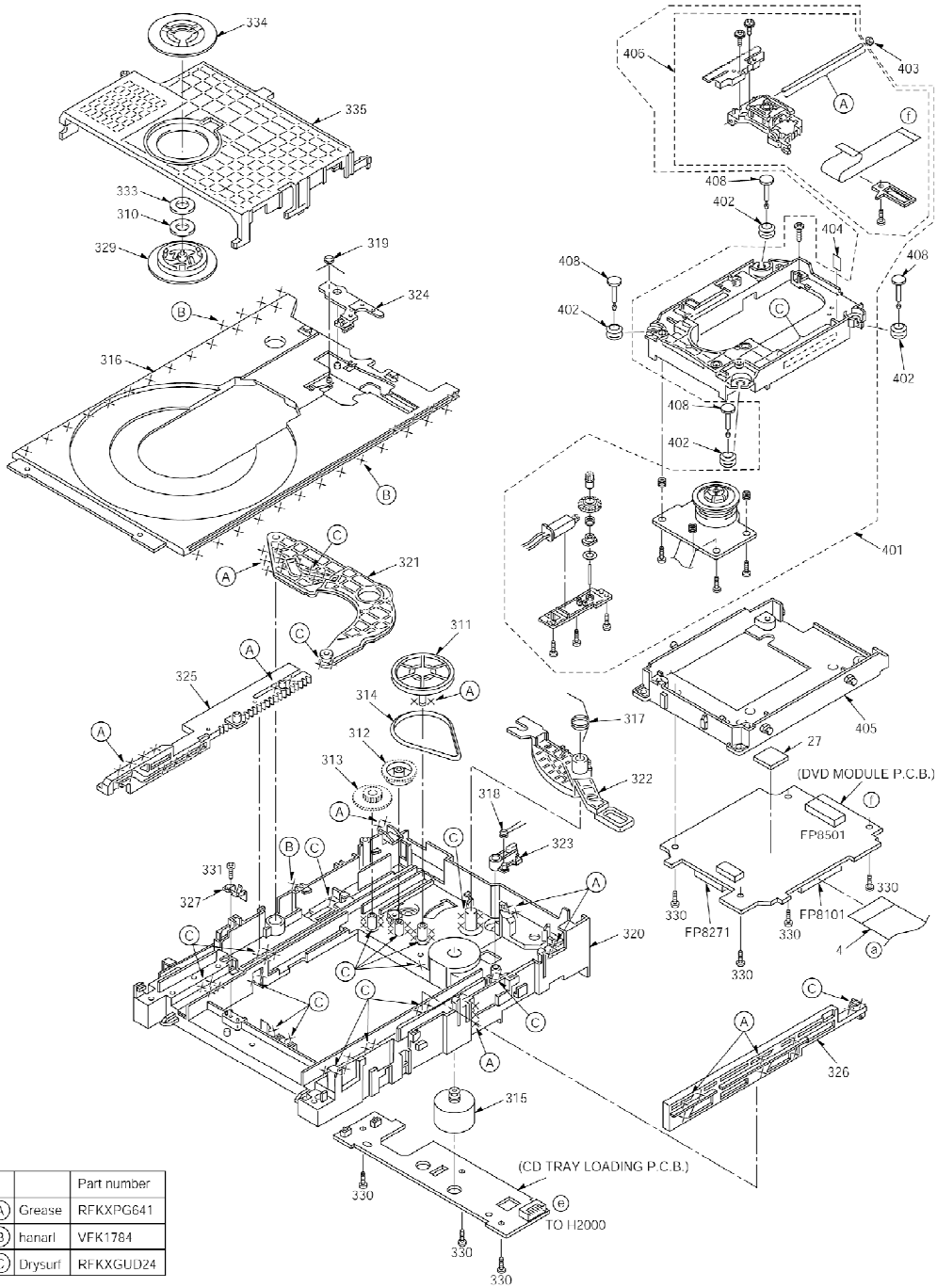

		Part number
A	Grease	RFKXPG641
B	hanarl	VFK1784
C	Drysurf	RFKXGUD24

28.1.2. Traverse and Cabinet Parts List

PDF created with pdfFactory Pro trial version www.pdffactory.com

Ref. No.	Part No.	Part Name & Description	Remarks
		CABINET AND CHASSIS	
1	J3CCBB000004	TUNER PACK	[M]
2	REEX0426	10P FFC WIRE (PANEL)	[M]
3	REEX0427	19P FFC WIRE (FL)	[M]
4	REEX0429	50P FFC (MECHA)	[M]
5	REXX0447	4P FLAT WIRE (MIC)	[M]GC GS
6	REXX0384	7P FLAT WIRE (DVD)	[M]
7	RYQX0207-S	DVD LID ASS'Y	[M]
8	RGLX0105-Q	LIGHTING PIECE	[M]
9	RGPX0170H-S	FRONT PANEL	[M]GC GS
9	RGPX0170J-S	FRONT PANEL	[M]GN
10	RGRX0043D-E1	REAR PANEL	[M]GC GS
10	RGRX0043D-G1	REAR PANEL	[M]GN
11	RGUX0601-S	POWER BUTTON	[M]
12	RGUX0602-S	OPERATION BUTTON	[M]
13	RGUX0603-S	REV-FWD BUTTON	[M]
14	RGWX0076-S	VOLUME KNOB	[M]
15	RHD26046	SCREW	[M]
16	RHD30007-1SJ	SCREW	[M]
17	RHD30090-1	SCREW	[M]
18	RHD30102-1	SCREW	[M]
19	RHD30119	SCREW	[M]
20	RKA0059-K	LEG RUBBER	[M]
21	RKMX0107-S	TOP CABINET	[M]
22	RKWX0242-Q	FL WINDOW	[M]
23	RKWX0243-S	SENSOR WINDOW	[M]
24	RMAX0071	MECHA SUPPORT	[M]
25	RMKX0102	BOTTOM CHASSIS	[M]
26	RMNX0149	FL HOLDER	[M]
27	RMX0290	PLASTIC SHEET	[M]
28	RGW0352-S	MIC KNOB	[M]GC GS
		TRAVERSE DECK	
310	RHM0003-J	MAGNET	[M]
311	RDG0547	PULLEY GEAR	[M]
312	RDG0548	RELAY GEAR	[M]
313	RDG0549	DRIVE GEAR	[M]
314	RDV0070	BELT	[M]
315	REM0102	MOTOR UNIT	[M]
316	RGQ0395-K	TRAY	[M]
317	RME0350	CHANGE LEVER SPRING	[M]
318	RME0351	LOCK LEVER SPRING	[M]
319	RME0353	TRAY SLIDER SPRING	[M]
320	RMK0591	MECHA CHASSIS	[M]
321	RML0627-2	DRIVE ARM	[M]
322	RML0628	CHANGE LEVER	[M]
323	RML0629	LOCK LEVER	[M]
324	RML0631	TRAY SLIDER	[M]
325	RMM0247-2	DRIVE RACK	[M]
326	RMM0248	SUB RACK	[M]
327	RMC0387	SUPPORT SPRING	[M]

PDF created with pdfFactory Pro trial version www.pdffactory.com

Ref. No.	Part No.	Part Name & Description	Remarks
329	RMR1446-X	CLAMPER	[M]
330	XTN26+6GFJ	SCREW	[M]
331	XTV2+6GFJ	ADDITIONAL SCREWS	[M]
333	XWG6FFY	WASHER	[M]
334	RMR1447-X	MAGNET HOLDER	[M]
335	RMR1468-K	CLAMP PLATE	[M]
401	RAE2012Z-S	DU69U BLK AFTER ALIG	[M]
402	RMG0598-A	FLOATING RUBBER	[M]
403	RMG0617-H	CUSHION RUBBER A	[M]
404	RMG0618-H	CUSHION RUBBER B	[M]
405	RMR1596-X2	MIDDLE CHASSIS	[M]
406	RXQ1252	DVD OPU SUB ASS'Y	[M]
408	RMS0789	FIXED PIN	[M]

28.2. Component Parts List

Ref. No.	Part No.	Part Name & Description	Remarks
		PRINTED CIRCUIT BOARDS	
	REP3867D	DVD MODULE P.C.B	[M] (RTL)
	REPX0485B	MAIN P.C.B	[M] (RTL) GC GS
	REPX0485D	MAIN P.C.B	[M] (RTL) GN
	REPX0485B	MIC P.C.B	[M] (RTL) GC GS
	REPX0457B	FL P.C.B	[M] (RTL) GC GS
	REPX0457A	FL P.C.B	[M] (RTL) GN
	REPX0457B	VOLUME P.C.B	[M] (RTL) GC GS
	REPX0457A	VOLUME P.C.B	[M] (RTL) GN
	REP3288A	TRAY LOADING P.C.B	[M] (RTL)
		INTEGRATED CIRCUITS	
IC904	C0GAG0000022	IC MOTOR DRIVER	[M]
IC2006	C9ZB00000466	IC VIDEO DRIVE	[M]
IC2010	C0ABBB000118	IC BUFFER AMP	[M]
IC2011	C1BB00000845	IC ASP	[M]
IC2013	C0AABB000125	IC HP AMP	[M]
IC2014	C1BB00000979	IC ANALOG SURROUND	[M]
IC2015	C0ABBB000118	IC BUFFER AMP	[M]
IC2016	C0ABCB000052	IC BUFFER AMP	[M]GC GS
IC2018	C2CBHG000168	IC MICRO-PROCESSOR	[M]
IC2601	C0ABBB000118	IC BUFFER AMP	[M]
IC2602	C0ABBB000118	IC BUFFER AMP	[M]
IC2801	C0DAAZG00012	IC DC-DC CONVERTER	[M]
IC2802	C0CBADG00023	IC 5V REGULATOR	[M]
IC2803	C0DBEZG00021	IC REGULATOR	[M]
IC6000	C0HBB0000044	IC DISPLAY	[M]
IC8001	MN2DS0003APH	IC DV2.1 LSI	[M]
IC8051	C3ABPG000133	IC 64M DRAM	[M]
IC8111	C0CBCBD00018	IC POWER SUPPLY	[M]
IC8251	C0GBG0000048	IC MOTOR DRIVER	[M]
IC8421	C0FBBK000050	IC AUDIO DAC	[M]
IC8601	C0EBE0000384	IC VOLTAGE DETECTING	[M]
IC8606	C0EBA0000031	IC RESET	[M]

PDF created with pdfFactory Pro trial version www.pdffactory.com

Ref. No.	Part No.	Part Name & Description	Remarks
IC8651	RFKWMH82B160	IC 16M FLASH ROM	[SPG]
IC8691	C0JBAA000346	IC AND GATE	[M]
IC8695	C0JBAA000346	IC AND GATE	[M]
		TRANSISTORS	
Q2000	B1GBCFLL0037	TRANSISTOR	[M]
Q2004	B1GBCFJN0033	TRANSISTOR	[M]
Q2026	B1GDCFGA0014	TRANSISTOR	[M]GN
Q2026	B1GDCFGA0018	TRANSISTOR	[M]GC GS
Q2028	B1GBCFJN0033	TRANSISTOR	[M]
Q2029	B1GBCFJN0033	TRANSISTOR	[M]
Q2030	B1GBCFJN0033	TRANSISTOR	[M]
Q2100	B1GFGCAA0001	TRANSISTOR	[M]
Q2102	B1GFGCAA0001	TRANSISTOR	[M]
Q2103	B1GDCFGA0018	TRANSISTOR	[M]
Q2104	B1GFGCAA0001	TRANSISTOR	[M]
Q2105	B1GDCFGA0018	TRANSISTOR	[M]
Q2200	B1GFGCAA0001	TRANSISTOR	[M]
Q2201	B1GDCFGA0018	TRANSISTOR	[M]
Q2301	B1GDCFGA0018	TRANSISTOR	[M]
Q2302	B1GFGCAA0001	TRANSISTOR	[M]
Q2306	B1GFGCAA0001	TRANSISTOR	[M]
Q2500	B1GDCFGA0018	TRANSISTOR	[M]
Q2600	B1GDCFGA0018	TRANSISTOR	[M]
Q2601	B1GFGCAA0001	TRANSISTOR	[M]
Q2604	B1ABEB000002	TRANSISTOR	[M]
Q2605	B1GDCFGA0018	TRANSISTOR	[M]
Q2607	B1ABCE000016	TRANSISTOR	[M]
Q2608	B1ABEB000002	TRANSISTOR	[M]
Q2609	B1GDCFGA0018	TRANSISTOR	[M]
Q2702	B1GDCFGA0018	TRANSISTOR	[M]GC GS
Q2703	B1ABEB000002	TRANSISTOR	[M]GC GS
Q2801	B1ADCF000001	TRANSISTOR	[M]
Q2803	B1BCCG000023	TRANSISTOR	[M]
Q2804	B1ABCE000016	TRANSISTOR	[M]
Q2805	B1ABCE000016	TRANSISTOR	[M]
Q2806	B1BCCD000019	TRANSISTOR	[M]
Q2807	B1BCCD000019	TRANSISTOR	[M]
Q2808	B1ADCF000001	TRANSISTOR	[M]
Q2809	B1ACKD000005	TRANSISTOR	[M]
Q2813	B1AAKD000014	TRANSISTOR	[M]
Q2814	2SD21370PA	TRANSISTOR	[M]
Q2816	B1BACD000018	TRANSISTOR	[M]
Q2818	B1GBCFJA0028	TRANSISTOR	[M]
Q6071	B1ABCF000011	TRANSISTOR	[M]GC GS
Q6072	B1ABCF000011	TRANSISTOR	[M]GC GS
Q6073	B1ABCF000011	TRANSISTOR	[M]GC GS
Q6074	B1GBCFJN0033	TRANSISTOR	[M]
Q8550	2SB1219AHL	TRANSISTOR	[M]
Q8551	2SD1819A0L	TRANSISTOR	[M]
Q8552	2SB09700RL	TRANSISTOR	[M]
Q8560	2SD1819A0L	TRANSISTOR	[M]
Q8561	2SD1819A0L	TRANSISTOR	[M]

PDF created with pdfFactory Pro trial version www.pdffactory.com

Ref. No.	Part No.	Part Name & Description	Remarks
Q8562	2SB09700RL	TRANSISTOR	[M]
Q8606	2SD1819A0L	TRANSISTOR	[M]
Q8607	2SD1819A0L	TRANSISTOR	[M]
QR8111	UNR521400L	CHIP TRANSISTOR	[M]
QR8112	UNR521400L	CHIP TRANSISTOR	[M]
QR8420	UNR521100L	CHIP TRANSISTOR	[M]
QR8571	UNR511V00L	CHIP TRANSISTOR	[M]
		DIODES	
D2000	B0ACCE000003	DIODE	[M]
D2001	B0ACCE000003	DIODE	[M]
D2002	B0ACCE000003	DIODE	[M]
D2003	B0ACCK000005	DIODE	[M]
D2041	B0EAKM000117	DIODE	[M]
D2042	B0EAKM000117	DIODE	[M]
D2601	B0ACCK000005	DIODE	[M]
D2602	B0ACCK000005	DIODE	[M]
D2603	B0ACCK000005	DIODE	[M]
D2801	B0JCPD000025	DIODE	[M]
D2802	B0BC7R500001	DIODE	[M]
D2803	B0ACCK000005	DIODE	[M]
D2804	B0BC9R000008	DIODE	[M]
D2805	B0ECKM000016	DIODE	[M]
D2806	B0ECKM000016	DIODE	[M]
D2807	B0ACCK000005	DIODE	[M]
D2808	B0ACCK000005	DIODE	[M]
D2809	B0EAKM000117	DIODE	[M]
D2810	B0EAKM000117	DIODE	[M]
D2811	B0EAKM000117	DIODE	[M]
D2812	B0EAKM000117	DIODE	[M]
D2813	B0EAKM000117	DIODE	[M]
D2814	B0EAKM000117	DIODE	[M]
D2815	B0EAKM000117	DIODE	[M]
D2816	B0EAKM000117	DIODE	[M]
D2817	B0EAKM000117	DIODE	[M]
D2818	MAZ82200ML	DIODE	[M]
D2822	B0FBAM000010	DIODE	[M]
D2823	B0BC5R600003	DIODE	[M]
D2824	B0BC7R500001	DIODE	[M]
D2827	B0EAKM000117	DIODE	[M]
D2829	B0ACCK000005	DIODE	[M]
D2830	B0BC01000014	DIODE	[M]
D2831	B0EAKM000117	DIODE	[M]
D2850	B0ACCK000005	DIODE	[M]
D2851	B0ADCJ000020	DIODE	[M]
D2852	B0ACCK000005	DIODE	[M]
D6000	B3AAA0000583	DIODE	[M]
D6006	B0BC5R000009	DIODE	[M]
D6008	B0BC5R000009	DIODE	[M]
D6010	B3AAA0000583	DIODE	[M]
D8231	MA2J11100L	DIODE	[M]
D8550	MA2J11100L	DIODE	[M]

PDF created with pdfFactory Pro trial version www.pdffactory.com

Ref. No.	Part No.	Part Name & Description	Remarks
D8571	MA2J72800L	DIODE	[M]
		CHIP INDUCTORS	
LB8001	J0JHC0000045	CHIP INDUCTOR	[M]
LB8002	J0JHC0000045	CHIP INDUCTOR	[M]
LB8301	J0JCC0000119	CHIP INDUCTOR	[M]
LB8302	J0JCC0000119	CHIP INDUCTOR	[M]
LB8303	J0JCC0000119	CHIP INDUCTOR	[M]
LB8304	J0JCC0000119	CHIP INDUCTOR	[M]
LB8305	J0JCC0000119	CHIP INDUCTOR	[M]
LB8401	ERJ2GEJ151X	CHIP RESISTOR	[M]
LB8421	ERJ2GE0R00X	CHIP RESISTOR	[M]
LB8422	ERJ2GE0R00X	CHIP RESISTOR	[M]
LB8423	ERJ2GE0R00X	CHIP RESISTOR	[M]
LB8424	ERJ2GE0R00X	CHIP RESISTOR	[M]
LB8425	ERJ2GE0R00X	CHIP RESISTOR	[M]
LB8426	ERJ2GE0R00X	CHIP RESISTOR	[M]
LB8427	ERJ2GE0R00X	CHIP RESISTOR	[M]
LB8428	ERJ2GE0R00X	CHIP RESISTOR	[M]
LB8429	ERJ2GE0R00X	CHIP RESISTOR	[M]
LB8430	ERJ2GE0R00X	CHIP RESISTOR	[M]
LB8491	ERJ2GE0R00X	CHIP RESISTOR	[M]
LB8502	J0JHC0000045	CHIP INDUCTOR	[M]
LB8503	ERJ2GE0R00X	CHIP RESISTOR	[M]
LB8504	J0JCC0000119	CHIP INDUCTOR	[M]
LB8505	J0JCC0000119	CHIP INDUCTOR	[M]
LB8507	J0JCC0000119	CHIP INDUCTOR	[M]
LB8511	ERJ3GEY0R00V	CHIP RESISTOR	[M]
LB8512	ERJ3GEY0R00V	CHIP RESISTOR	[M]
LB8513	ERJ3GEY0R00V	CHIP RESISTOR	[M]
LB8514	ERJ3GEY0R00V	CHIP RESISTOR	[M]
LB8690	J0JCC0000091	CHIP INDUCTOR	[M]
LB8691	ERJ2GEJ101X	CHIP RESISTOR	[M]
LB8692	ERJ2GEJ101X	CHIP RESISTOR	[M]
LB8693	ERJ2GEJ101X	CHIP RESISTOR	[M]
		VARIABLE RESISTORS	
VR6000	EVEKE2F3024M	VR VOLUME JOG	[M]
VR6001	EVUE27FK3B53	VR MIC	[M]GC GS
		SWITCHES	
S901	RSH1A044-1A	SW PLAY	[M]
S902	RSH1A044-1A	SW OPEN	[M]
S6000	EVQ21405R	SW OPEN/CLOSE	[M]
S6001	EVQ21405R	SW F.SKIP	[M]
S6002	EVQ21405R	SW R.SKIP	[M]
S6003	EVQ21405R	SW STOP	[M]
S6004	EVQ21405R	SW PAUSE	[M]
S6005	EVQ21405R	SW PLAY	[M]
S6011	EVQ21405R	SW POWER	[M]
S6012	EVQ21405R	SW INPUT SELECT	[M]

PDF created with pdfFactory Pro trial version www.pdffactory.com

Ref. No.	Part No.	Part Name & Description	Remarks
S6013	EVQ21405R	SW PROGRESSIVE	[M]
S6014	EVQ21405R	SW H.BASS	[M]
		CONNECTORS	
CN901	K1KA07B00027	7P CONNECTOR	[M]
CN2002	K1KA10A00263	10P CONNECTOR	[M]
CN2004	K1MN50A00008	50P CONNECTOR	[M]
CN2008	K1MN10A00052	10P CONNECTOR	[M]
CN2009	K1MN19A00036	19P CONNECTOR	[M]
CN6008	K1MN19B00026	19P CONNECTOR	[M]
CN6009	K1KA04B00057	4P CONNECTOR	[M]GC GS
CN6032	K1MN10B00088	10P CONNECTOR	[M]
FP8101	K1MN50B00031	50P CONNECTOR	[M]
FP8201	K1MN06B00080	6P CONNECTOR	[M]
FP8501	K1MN26B00094	26P CONNECTOR	[M]
		COILS	
L2000	G0C3R3JA0027	COIL	[M]
L2010	ELESN220JA	COIL	[M]
L2022	J0JBC0000015	CHIP INDUCTOR	[M]
L2023	J0JBC0000015	CHIP INDUCTOR	[M]
L2024	J0JBC0000015	CHIP INDUCTOR	[M]
L2025	J0JBC0000015	CHIP INDUCTOR	[M]
L2026	J0JBC0000015	CHIP INDUCTOR	[M]
L2027	J0JBC0000015	CHIP INDUCTOR	[M]
L2028	J0JBC0000019	CHIP INDUCTOR	[M]
L2801	G0ZZ00001930	COIL	[M]
L2802	G0A200D00002	COIL	[M]
L2803	G0A200D00002	COIL	[M]
L6000	J0JBC0000019	CHIP INDUCTOR	[M]
L6001	J0JBC0000019	CHIP INDUCTOR	[M]
L6002	J0JBC0000019	CHIP INDUCTOR	[M]
L6003	J0JBC0000041	CHIP INDUCTOR	[M]
L6004	J0JBC0000019	CHIP INDUCTOR	[M]GC GS
L6005	J0JBC0000030	CHIP	[M]GC GS
L6006	J0JBC0000019	CHIP INDUCTOR	[M]GC GS
L8201	G1C100K00020	CHIP INDUCTOR	[M]
L8202	J0JCC0000079	FILTER	[M]
L8301	G1C100KA0055	CHIP INDUCTOR	[M]
L8302	J0JCC0000079	FILTER	[M]
L8550	G1C100KA0055	CHIP INDUCTOR	[M]
		COMPONENT COMBINATION	
Z6000	B3RAB0000025	REMOTE SENSOR	[M]
		OSCILLATORS	
X2000	H2B100500004	CERAMIC RESONATORS	[M]
X8621	H0J270500085	CRYSTAL	[M]
		DISPLAY TUBE	

PDF created with pdfFactory Pro trial version www.pdffactory.com

Ref. No.	Part No.	Part Name & Description	Remarks
FL6000	A2BD00000108	FL DISPLAY	[M]
FL8101	F1H0J1050022	CHIP CAPACITOR	[M]
FL8102	F1H0J1050022	CHIP CAPACITOR	[M]
FL8103	F1H0J1050022	CHIP CAPACITOR	[M]
FL8104	F1J1E1040022	CHIP CAPACITOR	[M]
		FUSE PROTECTOR	
FP2000	K5G202AA0002	FUSE PROTECTOR	[M] ⚠
		HOLDERS	
H2000	RMR0316	7P WIRE HOLDER	[M]
H6010	K1ZZ00000832	4P WIRE HOLDER	[M]GC GS
		JACKS	
JK2000	K1FB125B0097	JK SYSTEM CONNECTOR	[M]
JK2001	K2HZ929B0001	JK COMBO	[M]
JK6002	K2HC103A0024	JK SMALL SIGN	[M]
JK6010	K2HB102J0038	JK	[M]GC GS
JK6011	K2HB102J0038	JK	[M]GC GS
		EARTH TERMINAL	
E2000	K4CZ01000027	TERMINALS	[M]
		CHIP JUMPERS	
W601	ERJ3GEY0R00V	CHIP RESISTOR	[M]GN
W602	ERJ3GEY0R00V	CHIP RESISTOR	[M]GC GS
W604	ERJ3GEY0R00V	CHIP RESISTOR	[M]
W1208	ERJ6GEY0R00V	CHIP RESISTOR	[M]
W2001	ERJ3GEY0R00V	CHIP RESISTOR	[M]
W2002	ERJ3GEY0R00V	CHIP RESISTOR	[M]
W2003	ERJ3GEY0R00V	CHIP RESISTOR	[M]
W2004	ERJ3GEY0R00V	CHIP RESISTOR	[M]
W2005	ERJ3GEY0R00V	CHIP RESISTOR	[M]
W2009	ERJ6GEY0R00V	CHIP RESISTOR	[M]
W2012	ERJ3GEY0R00V	CHIP RESISTOR	[M]
W2013	ERJ3GEY0R00V	CHIP RESISTOR	[M]
W2014	ERJ3GEY0R00V	CHIP RESISTOR	[M]
W2015	ERJ3GEY0R00V	CHIP RESISTOR	[M]
W2016	ERJ6GEY0R00V	CHIP RESISTOR	[M]
W2017	ERJ3GEY0R00V	CHIP RESISTOR	[M]
W2018	ERJ3GEY0R00V	CHIP RESISTOR	[M]
W2019	ERJ6GEY0R00V	CHIP RESISTOR	[M]
W2023	ERJ6GEY0R00V	CHIP RESISTOR	[M]
W2026	ERJ3GEY0R00V	CHIP RESISTOR	[M]
W2027	ERJ6GEY0R00V	CHIP RESISTOR	[M]
W2028	ERJ6GEY0R00V	CHIP RESISTOR	[M]
W2029	ERJ6GEY0R00V	CHIP RESISTOR	[M]
W2030	ERJ3GEY0R00V	CHIP RESISTOR	[M]

PDF created with pdfFactory Pro trial version www.pdffactory.com

[illegible]	[illegible]	[illegible]	[illegible]

PDF created with pdfFactory Pro trial version www.pdffactory.com

Ref. No.	Part No.	Part Name & Description	Remarks
W2031	ERJ3GEY0R00V	CHIP RESISTOR	[M]
W2032	ERJ3GEY0R00V	CHIP RESISTOR	[M]
W2033	ERJ3GEY0R00V	CHIP RESISTOR	[M]
W2041	ERJ3GEY0R00V	CHIP RESISTOR	[M]
W2042	ERJ3GEY0R00V	CHIP RESISTOR	[M]
W2043	ERJ3GEY0R00V	CHIP RESISTOR	[M]
W2044	ERJ6GEY0R00V	CHIP RESISTOR	[M]
W2045	ERJ6GEY0R00V	CHIP RESISTOR	[M]
W2049	ERJ6GEY0R00V	CHIP RESISTOR	[M]
W2051	ERJ6GEY0R00V	CHIP RESISTOR	[M]
W2052	ERJ6GEY0R00V	CHIP RESISTOR	[M]
W2055	ERJ6GEY0R00V	CHIP RESISTOR	[M]
W2056	ERJ6GEY0R00V	CHIP RESISTOR	[M]
W2057	ERJ6GEY0R00V	CHIP RESISTOR	[M]
W2058	ERJ6GEY0R00V	CHIP RESISTOR	[M]
W2059	ERJ6GEY0R00V	CHIP RESISTOR	[M]
W2060	ERJ6GEY0R00V	CHIP RESISTOR	[M]
W2061	ERJ6GEY0R00V	CHIP RESISTOR	[M]
W2062	ERJ6GEY0R00V	CHIP RESISTOR	[M]
W2064	ERJ6GEY0R00V	CHIP RESISTOR	[M]
W2065	ERJ6GEY0R00V	CHIP RESISTOR	[M]
W2068	ERJ6GEY0R00V	CHIP RESISTOR	[M]
W2071	ERJ3GEY0R00V	CHIP RESISTOR	[M]
W2072	ERJ3GEY0R00V	CHIP RESISTOR	[M]
W2074	ERJ6GEY0R00V	CHIP RESISTOR	[M]
W2076	ERJ6GEY0R00V	CHIP RESISTOR	[M]
W2086	ERJ6GEY0R00V	CHIP RESISTOR	[M]
W2119	ERJ6GEY0R00V	CHIP RESISTOR	[M]
W2128	ERJ3GEY0R00V	CHIP RESISTOR	[M]
W3000	ERJ3GEY0R00V	CHIP RESISTOR	[M]
W4000	ERJ3GEY0R00V	CHIP RESISTOR	[M]
W6001	ERJ6GEY0R00V	CHIP RESISTOR	[M]
W6002	ERJ6GEY0R00V	CHIP RESISTOR	[M]
W6003	ERJ6GEY0R00V	CHIP RESISTOR	[M]
W6005	ERJ6GEY0R00V	CHIP RESISTOR	[M]
W6006	ERJ6GEY0R00V	CHIP RESISTOR	[M]
W6010	ERJ6GEY0R00V	CHIP RESISTOR	[M]
W6011	ERJ6GEY0R00V	CHIP RESISTOR	[M]
W6012	ERJ6GEY0R00V	CHIP RESISTOR	[M]
W6013	ERJ6GEY0R00V	CHIP RESISTOR	[M]
W6014	ERJ6GEY0R00V	CHIP RESISTOR	[M]
W6015	ERJ3GEY0R00V	CHIP RESISTOR	[M]
W6031	ERJ6GEY0R00V	CHIP RESISTOR	[M]
W6033	ERJ6GEY0R00V	CHIP RESISTOR	[M]
W6034	ERJ6GEY0R00V	CHIP RESISTOR	[M]
W6035	ERJ6GEY0R00V	CHIP RESISTOR	[M]
W6036	ERJ3GEY0R00V	CHIP RESISTOR	[M]GN
		RESISTORS	
R2000	ERJ3GEYJ221V	220 1/16W	[M]
R2001	ERJ3GEYJ221V	220 1/16W	[M]
R2002	ERJ3GEYJ221V	220 1/16W	[M]
R2003	ERJ3GEYJ221V	220 1/16W	[M]

PDF created with pdfFactory Pro trial version www.pdffactory.com

Ref. No.	Part No.	Part Name & Description	Remarks
R2006	ERJ3GEYJ221V	220 1/16W	[M]
R2007	ERJ3GEYJ102V	1K 1/16W	[M]
R2008	ERJ3GEYJ103V	10K 1/16W	[M]
R2011	ERJ3GEYJ473V	47K 1/16W	[M]
R2012	ERJ3GEYJ221V	220 1/16W	[M]
R2013	ERJ3GEYJ221V	220 1/16W	[M]
R2014	ERJ3GEYJ221V	220 1/16W	[M]
R2016	ERJ3GEYJ221V	220 1/16W	[M]
R2017	ERJ3GEYJ103V	10K 1/16W	[M]
R2018	ERJ3GEYJ221V	220 1/16W	[M]
R2019	ERJ3GEYJ221V	220 1/16W	[M]
R2020	ERJ3GEYJ473V	47K 1/16W	[M]
R2021	ERJ3GEYJ473V	47K 1/16W	[M]
R2022	ERJ3GEYJ473V	47K 1/16W	[M]
R2023	ERJ3GEYJ103V	10K 1/16W	[M]
R2025	ERJ3GEYJ221V	220 1/16W	[M]
R2026	ERJ3GEYJ221V	220 1/16W	[M]
R2027	ERJ3GEYJ221V	220 1/16W	[M]
R2028	ERJ3GEYJ102V	1K 1/16W	[M]
R2029	ERJ3GEYJ221V	220 1/16W	[M]
R2030	ERJ3GEYJ221V	220 1/16W	[M]
R2031	ERJ3GEYJ221V	220 1/16W	[M]
R2032	ERJ3GEYJ221V	220 1/16W	[M]
R2033	ERJ3GEYJ221V	220 1/16W	[M]
R2034	ERJ3GEYJ221V	220 1/16W	[M]
R2035	ERJ3GEYJ221V	220 1/16W	[M]
R2036	ERJ3GEYJ102V	1K 1/16W	[M]
R2037	ERJ3GEYJ102V	1K 1/16W	[M]
R2039	ERJ3GEYJ221V	220 1/16W	[M]
R2040	ERJ3GEYJ221V	220 1/16W	[M]
R2041	ERJ3GEYJ221V	220 1/16W	[M]
R2043	ERJ3GEYJ221V	220 1/16W	[M]
R2047	ERJ3GEYJ221V	220 1/16W	[M]
R2048	ERJ3GEYJ221V	220 1/16W	[M]
R2049	ERJ3GEYJ221V	220 1/16W	[M]
R2050	ERJ3GEYJ221V	220 1/16W	[M]
R2051	ERJ3GEYJ221V	220 1/16W	[M]
R2052	ERJ3GEYJ221V	220 1/16W	[M]
R2053	ERJ3GEYJ221V	220 1/16W	[M]
R2054	ERJ3GEYJ221V	220 1/16W	[M]
R2056	ERJ3GEYJ473V	47K 1/16W	[M]
R2057	ERJ3GEYJ473V	47K 1/16W	[M]
R2058	ERJ3GEYJ563V	56K 1/16W	[M]
R2059	ERJ3GEYJ221V	220 1/16W	[M]
R2060	ERJ3GEYJ101V	100 1/16W	[M]
R2061	ERJ3GEYJ221V	220 1/16W	[M]
R2062	ERJ3GEYJ221V	220 1/16W	[M]
R2064	ERJ3GEYJ101V	100 1/16W	[M]
R2065	ERJ3GEYJ103V	10K 1/16W	[M]
R2066	ERJ3GEYJ103V	10K 1/16W	[M]
R2067	ERJ3GEYJ103V	10K 1/16W	[M]
R2068	ERJ3GEYJ103V	10K 1/16W	[M]
R2069	ERJ3GEYJ103V	10K 1/16W	[M]GC GS
R2069	ERJ3GEYJ682V	6.8K 1/16W	[M]GN

PDF created with pdfFactory Pro trial version www.pdffactory.com

Ref. No.	Part No.	Part Name & Description	Remarks
R2070	ERJ3GEYJ332V	3.3K 1/16W	[M]
R2071	ERJ3GEYJ182V	1.8K 1/16W	[M]GN
R2071	ERJ3GEYJ472V	4.7K 1/16W	[M]GC GS
R2072	ERJ3GEYJ101V	100 1/16W	[M]
R2073	ERJ3GEY0R00V	0 1/16W	[M]
R2074	ERJ3GEYJ272V	2.7K 1/16W	[M]
R2076	ERJ3GEYJ104V	100K 1/16W	[M]
R2077	ERJ3GEYJ472V	4.7K 1/16W	[M]
R2078	ERJ3GEYJ471V	470 1/16W	[M]
R2079	ERJ3GEYJ223V	22K 1/16W	[M]
R2080	ERJ3GEYJ103V	10K 1/16W	[M]
R2082	ERJ3GEYJ473V	47K 1/16W	[M]
R2083	ERJ3GEYJ681V	680 1/16W	[M]
R2085	ERJ3GEY0R00V	0 1/16W	[M]
R2092	ERJ3GEYJ472V	4.7K 1/16W	[M]
R2093	ERJ3GEYJ223V	22K 1/16W	[M]
R2094	ERJ3GEYJ223V	22K 1/16W	[M]
R2100	ERJ3GEYJ102V	1K 1/16W	[M]
R2101	ERJ3GEYJ473V	47K 1/16W	[M]
R2106	ERJ3GEYJ102V	1K 1/16W	[M]
R2107	ERJ3GEYJ104V	100K 1/16W	[M]
R2108	ERJ3GEYJ272V	2.7K 1/16W	[M]
R2111	ERJ3GEYJ333V	33K 1/16W	[M]
R2112	ERJ3GEYJ103V	10K 1/16W	[M]
R2113	ERJ3GEYJ103V	10K 1/16W	[M]
R2114	ERJ3GEYJ103V	10K 1/16W	[M]
R2115	ERJ3GEYJ273V	27K 1/16W	[M]
R2116	ERJ3GEYJ104V	100K 1/16W	[M]
R2117	ERJ3GEYJ104V	100K 1/16W	[M]
R2118	ERJ3GEYJ223V	22K 1/16W	[M]GC GS
R2119	ERJ3GEYJ222V	2.2K 1/16W	[M]GC GS
R2120	ERJ3GEYJ223V	22K 1/16W	[M]GC GS
R2121	ERJ3GEYJ223V	22K 1/16W	[M]GC GS
R2122	ERJ3GEYJ223V	22K 1/16W	[M]GC GS
R2125	ERJ3GEYJ182V	1.8K 1/16W	[M]GC GS
R2126	ERJ3GEYJ102V	1K 1/16W	[M]GC GS
R2127	ERJ3GEYJ104V	100K 1/16W	[M]
R2128	ERJ3GEYJ102V	1K 1/16W	[M]
R2129	ERJ3GEYJ123V	12K 1/16W	[M]
R2130	ERJ3GEYJ103V	10K 1/16W	[M]
R2131	ERJ3GEYJ103V	10K 1/16W	[M]
R2132	ERJ3GEYJ103V	10K 1/16W	[M]
R2133	ERJ3GEYJ103V	10K 1/16W	[M]
R2134	ERJ3GEYJ103V	10K 1/16W	[M]
R2135	ERJ3GEYJ103V	10K 1/16W	[M]
R2144	ERJ3GEYJ152V	1.5K 1/16W	[M]GN
R2144	ERJ3GEYJ222V	2.2K 1/16W	[M]GC GS
R2145	ERJ3GEYJ682V	6.8K 1/16W	[M]
R2146	ERJ3GEYJ333V	33K 1/16W	[M]
R2147	ERJ3GEYJ220V	22 1/16W	[M]
R2148	ERJ3GEYJ220V	22 1/16W	[M]
R2149	ERJ3GEYJ220V	22 1/16W	[M]
R2150	ERJ3GEYJ220V	22 1/16W	[M]
R2151	ERJ3GEYJ472V	4.7K 1/16W	[M]

PDF created with pdfFactory Pro trial version www.pdffactory.com

Ref. No.	Part No.	Part Name & Description	Remarks
R2152	ERJ3GEYJ272V	2.7K 1/16W	[M]
R2153	ERJ3GEYJ100V	10 1/16W	[M]
R2154	ERJ3GEYJ222V	2.2K 1/16W	[M]
R2155	ERJ3GEYJ104V	100K 1/16W	[M]
R2156	ERJ3GEYJ103V	10K 1/16W	[M]
R2157	ERJ3GEYJ123V	12K 1/16W	[M]
R2160	ERJ3GEYJ822V	8.2K 1/16W	[M]
R2161	ERJ3GEYJ223V	22K 1/16W	[M]
R2162	ERJ3GEYJ392V	3.9K 1/16W	[M]
R2163	ERJ3GEYJ102V	1K 1/16W	[M]
R2164	ERJ3GEYJ333V	33K 1/16W	[M]
R2165	ERJ3GEYJ103V	10K 1/16W	[M]
R2166	ERJ3GEYJ122V	1.2K 1/16W	[M]
R2167	ERJ3GEYJ123V	12K 1/16W	[M]
R2168	ERJ3GEYJ223V	22K 1/16W	[M]
R2169	ERJ3GEYJ562V	5.6K 1/16W	[M]
R2170	ERJ3GEYJ272V	2.7K 1/16W	[M]
R2172	ERJ3GEY0R00V	0 1/16W	[M]
R2178	ERJ3GEYJ223V	22K 1/16W	[M]
R2181	ERJ3GEYJ224V	220K 1/16W	[M]
R2184	ERJ3GEYJ224V	220K 1/16W	[M]
R2186	ERJ3GEYJ222V	2.2K 1/16W	[M]
R2187	ERJ3GEYJ222V	2.2K 1/16W	[M]
R2190	ERJ3GEY0R00V	0 1/16W	[M]GN
R2191	ERJ3GEY0R00V	0 1/16W	[M]GC GS
R2192	ERJ3GEYJ563V	56K 1/16W	[M]
R2200	ERJ3GEYJ102V	1K 1/16W	[M]
R2201	ERJ3GEYJ473V	47K 1/16W	[M]
R2206	ERJ3GEYJ102V	1K 1/16W	[M]
R2207	ERJ3GEYJ104V	100K 1/16W	[M]
R2208	ERJ3GEYJ272V	2.7K 1/16W	[M]
R2211	ERJ3GEYJ333V	33K 1/16W	[M]
R2212	ERJ3GEYJ103V	10K 1/16W	[M]
R2213	ERJ3GEYJ103V	10K 1/16W	[M]
R2214	ERJ3GEYJ103V	10K 1/16W	[M]
R2215	ERJ3GEYJ273V	27K 1/16W	[M]
R2216	ERJ3GEYJ104V	100K 1/16W	[M]
R2217	ERJ3GEYJ104V	100K 1/16W	[M]
R2218	ERJ3GEYJ223V	22K 1/16W	[M]GC GS
R2219	ERJ3GEYJ222V	2.2K 1/16W	[M]GC GS
R2220	ERJ3GEYJ223V	22K 1/16W	[M]GC GS
R2221	ERJ3GEYJ223V	22K 1/16W	[M]GC GS
R2222	ERJ3GEYJ223V	22K 1/16W	[M]GC GS
R2227	ERJ3GEYJ104V	100K 1/16W	[M]
R2228	ERJ3GEYJ102V	1K 1/16W	[M]
R2229	ERJ3GEYJ103V	10K 1/16W	[M]
R2230	ERJ3GEYJ103V	10K 1/16W	[M]
R2231	ERJ3GEYJ103V	10K 1/16W	[M]
R2232	ERJ3GEYJ103V	10K 1/16W	[M]
R2233	ERJ3GEYJ103V	10K 1/16W	[M]
R2234	ERJ3GEYJ103V	10K 1/16W	[M]
R2235	ERJ3GEYJ123V	12K 1/16W	[M]
R2244	ERJ3GEYJ152V	1.5K 1/16W	[M]GN
R2244	ERJ3GEYJ222V	2.2K 1/16W	[M]GC GS

PDF created with pdfFactory Pro trial version www.pdffactory.com

Ref. No.	Part No.	Part Name & Description	Remarks
R2245	ERJ3GEYJ682V	6.8K 1/16W	[M]
R2246	ERJ3GEYJ333V	33K 1/16W	[M]
R2247	ERJ3GEYJ220V	22 1/16W	[M]
R2248	ERJ3GEYJ220V	22 1/16W	[M]
R2249	ERJ3GEYJ220V	22 1/16W	[M]
R2250	ERJ3GEYJ220V	22 1/16W	[M]
R2251	ERJ3GEYJ472V	4.7K 1/16W	[M]
R2252	ERJ3GEYJ272V	2.7K 1/16W	[M]
R2253	ERJ3GEYJ100V	10 1/16W	[M]
R2254	ERJ3GEYJ222V	2.2K 1/16W	[M]
R2255	ERJ3GEYJ104V	100K 1/16W	[M]
R2256	ERJ3GEYJ103V	10K 1/16W	[M]
R2257	ERJ3GEYJ123V	12K 1/16W	[M]
R2260	ERJ3GEYJ822V	8.2K 1/16W	[M]
R2261	ERJ3GEYJ392V	3.9K 1/16W	[M]
R2262	ERJ3GEYJ223V	22K 1/16W	[M]
R2263	ERJ3GEYJ102V	1K 1/16W	[M]
R2264	ERJ3GEYJ333V	33K 1/16W	[M]
R2265	ERJ3GEYJ103V	10K 1/16W	[M]
R2266	ERJ3GEYJ182V	1.8K 1/16W	[M]
R2267	ERJ3GEYJ563V	56K 1/16W	[M]
R2268	ERJ3GEYJ273V	27K 1/16W	[M]
R2269	ERJ3GEYJ562V	5.6K 1/16W	[M]
R2271	ERJ3GEY0R00V	0 1/16W	[M]
R2278	ERJ3GEYJ223V	22K 1/16W	[M]
R2290	ERJ3GEY0R00V	0 1/16W	[M]GN
R2291	ERJ3GEY0R00V	0 1/16W	[M]GC GS
R2292	ERJ3GEYJ563V	56K 1/16W	[M]
R2300	ERJ3GEYJ103V	10K 1/16W	[M]
R2301	ERJ3GEYJ302V	3K 1/16W	[M]
R2302	ERJ3GEYJ103V	10K 1/16W	[M]
R2303	ERJ3GEYJ393V	39K 1/16W	[M]
R2304	ERJ3GEYJ682V	6.8K 1/16W	[M]GN
R2304	ERJ3GEYJ752V	7.5K 1/16W	[M]GC GS
R2305	ERJ3GEYJ102V	1K 1/16W	[M]
R2306	ERJ3GEYJ104V	100K 1/16W	[M]
R2307	ERJ3GEYJ101V	100 1/16W	[M]
R2308	ERJ3GEYJ182V	1.8K 1/16W	[M]
R2309	ERJ3GEYJ563V	56K 1/16W	[M]
R2310	ERJ3GEYJ273V	27K 1/16W	[M]
R2311	ERJ3GEYJ222V	2.2K 1/16W	[M]
R2312	ERJ3GEYJ222V	2.2K 1/16W	[M]
R2326	ERJ3GEYJ563V	56K 1/16W	[M]
R2327	ERJ3GEYJ273V	27K 1/16W	[M]
R2328	ERJ3GEYJ102V	1K 1/16W	[M]
R2330	ERJ3GEYJ123V	12K 1/16W	[M]
R2331	ERJ3GEYJ182V	1.8K 1/16W	[M]
R2400	ERJ3GEYJ103V	10K 1/16W	[M]
R2401	ERJ3GEYJ302V	3K 1/16W	[M]
R2402	ERJ3GEYJ103V	10K 1/16W	[M]
R2403	ERJ3GEYJ393V	39K 1/16W	[M]
R2404	ERJ3GEYJ682V	6.8K 1/16W	[M]GN
R2404	ERJ3GEYJ752V	7.5K 1/16W	[M]GC GS
R2405	ERJ3GEYJ102V	1K 1/16W	[M]

PDF created with pdfFactory Pro trial version www.pdffactory.com

Ref. No.	Part No.	Part Name & Description	Remarks
R2406	ERJ3GEYJ104V	100K 1/16W	[M]
R2407	ERJ3GEYJ101V	100 1/16W	[M]
R2428	ERJ3GEYJ102V	1K 1/16W	[M]
R2430	ERJ3GEYJ123V	12K 1/16W	[M]
R2500	ERJ3GEYJ103V	10K 1/16W	[M]
R2501	ERJ3GEYJ473V	47K 1/16W	[M]
R2502	ERJ3GEYJ682V	6.8K 1/16W	[M]GN
R2502	ERJ3GEYJ752V	7.5K 1/16W	[M]GC GS
R2503	ERJ3GEYJ332V	3.3K 1/16W	[M]
R2504	ERJ3GEYJ682V	6.8K 1/16W	[M]
R2505	ERJ3GEYJ102V	1K 1/16W	[M]
R2506	ERJ3GEYJ333V	33K 1/16W	[M]
R2507	ERJ3GEYJ103V	10K 1/16W	[M]
R2508	ERJ3GEYJ182V	1.8K 1/16W	[M]
R2509	ERJ3GEYJ563V	56K 1/16W	[M]
R2510	ERJ3GEYJ273V	27K 1/16W	[M]
R2511	ERJ3GEYJ222V	2.2K 1/16W	[M]
R2521	ERJ3GEY0R00V	0 1/16W	[M]
R2600	ERJ3GEYJ103V	10K 1/16W	[M]
R2601	ERJ3GEYJ103V	10K 1/16W	[M]
R2602	ERJ3GEYJ103V	10K 1/16W	[M]
R2603	ERJ3GEYJ153V	15K 1/16W	[M]GN
R2603	ERJ3GEYJ203V	20K 1/16W	[M]GC GS
R2604	ERJ3GEYJ333V	33K 1/16W	[M]
R2605	ERJ3GEYJ222V	2.2K 1/16W	[M]
R2606	ERJ3GEYJ103V	10K 1/16W	[M]
R2607	ERJ3GEYJ273V	27K 1/16W	[M]
R2608	ERJ3GEYJ154V	150K 1/16W	[M]
R2609	ERJ3GEYJ563V	56K 1/16W	[M]
R2610	ERJ3GEYJ152V	1.5K 1/16W	[M]
R2611	ERJ3GEYJ563V	56K 1/16W	[M]
R2612	ERJ3GEYJ682V	6.8K 1/16W	[M]
R2613	ERJ3GEYJ332V	3.3K 1/16W	[M]
R2614	ERJ3GEYJ102V	1K 1/16W	[M]
R2615	ERJ3GEYJ104V	100K 1/16W	[M]
R2616	ERJ3GEYJ333V	33K 1/16W	[M]
R2617	ERJ3GEYJ333V	33K 1/16W	[M]
R2618	ERJ3GEYJ102V	1K 1/16W	[M]
R2619	ERJ3GEYJ222V	2.2K 1/16W	[M]
R2620	ERJ3GEYJ182V	1.8K 1/16W	[M]
R2621	ERJ3GEYJ563V	56K 1/16W	[M]
R2622	ERJ3GEYJ273V	27K 1/16W	[M]
R2623	ERJ3GEYJ104V	100K 1/16W	[M]
R2624	ERJ3GEYJ104V	100K 1/16W	[M]
R2625	ERJ3GEYJ223V	22K 1/16W	[M]
R2627	ERJ3GEYJ104V	100K 1/16W	[M]
R2629	ERJ3GEYJ333V	33K 1/16W	[M]
R2630	ERJ3GEYJ104V	100K 1/16W	[M]
R2631	ERJ3GEYJ104V	100K 1/16W	[M]
R2632	ERJ3GEYJ822V	8.2K 1/16W	[M]
R2633	ERJ3GEYJ104V	100K 1/16W	[M]
R2634	ERJ3GEYJ822V	8.2K 1/16W	[M]
R2635	ERJ3GEYJ103V	10K 1/16W	[M]
R2636	ERJ3GEYJ103V	10K 1/16W	[M]

PDF created with pdfFactory Pro trial version www.pdffactory.com

Ref. No.	Part No.	Part Name & Description	Remarks
R2637	ERJ3GEYJ102V	1K 1/16W	[M]
R2638	ERJ3GEYJ683V	68K 1/16W	[M]
R2639	ERJ3GEYJ182V	1.8K 1/16W	[M]
R2640	ERJ3GEY0R00V	0 1/16W	[M]
R2641	ERJ3GEYJ392V	3.9K 1/16W	[M]
R2642	ERJ3GEYJ683V	68K 1/16W	[M]
R2643	ERJ3GEYJ104V	100K 1/16W	[M]
R2644	ERJ3GEYJ273V	27K 1/16W	[M]
R2645	ERJ3GEYJ563V	56K 1/16W	[M]
R2646	ERJ3GEYJ182V	1.8K 1/16W	[M]
R2647	ERJ3GEYJ332V	3.3K 1/16W	[M]
R2648	ERJ3GEYJ103V	10K 1/16W	[M]
R2649	ERJ3GEYJ222V	2.2K 1/16W	[M]
R2650	ERJ3GEYJ303V	30K 1/16W	[M]
R2651	ERJ3GEYJ123V	12K 1/16W	[M]
R2652	ERJ3GEYJ104V	100K 1/16W	[M]
R2654	ERJ3GEYJ103V	10K 1/16W	[M]
R2655	ERJ3GEYJ103V	10K 1/16W	[M]
R2656	ERJ3GEYJ472V	4.7K 1/16W	[M]
R2657	ERJ3GEYJ104V	100K 1/16W	[M]
R2658	ERJ3GEYJ222V	2.2K 1/16W	[M]
R2659	ERJ3GEYJ563V	56K 1/16W	[M]
R2660	ERJ3GEYJ182V	1.8K 1/16W	[M]
R2661	ERJ3GEYJ273V	27K 1/16W	[M]
R2662	ERJ3GEYJ104V	100K 1/16W	[M]
R2663	ERJ3GEYJ392V	3.9K 1/16W	[M]
R2664	ERJ3GEYJ392V	3.9K 1/16W	[M]
R2708	ERJ3GEYJ182V	1.8K 1/16W	[M]GC GS
R2709	ERJ3GEYJ273V	27K 1/16W	[M]GC GS
R2710	ERJ3GEYJ563V	56K 1/16W	[M]GC GS
R2711	ERJ3GEYJ222V	2.2K 1/16W	[M]GC GS
R2712	ERJ3GEYJ104V	100K 1/16W	[M]GC GS
R2713	ERJ3GEYJ102V	1K 1/16W	[M]GC GS
R2801	ERJ3GEYJ1R0V	1 1/16W	[M]
R2803	ERJ3GEYJ222V	2.2K 1/16W	[M]
R2804	ERJ3GEYJ272V	2.7K 1/16W	[M]
R2805	ERJ3GEYJ1R0V	1 1/16W	[M]
R2806	ERJ3GEYJ1R0V	1 1/16W	[M]
R2808	ERJ3GEYJ1R0V	1 1/16W	[M]
R2811	ERJ3GEYJ103V	10K 1/16W	[M]
R2813	ERJ3GEYJ471V	470 1/16W	[M]
R2815	ERJ3GEYJ472V	4.7K 1/16W	[M]
R2817	ERJ3GEYJ102V	1K 1/16W	[M]
R2819	ERJ3GEYJ471V	470 1/16W	[M]
R2820	ERJ3GEYJ222V	2.2K 1/16W	[M]
R2821	ERJ3GEYJ182V	1.8K 1/16W	[M]
R2822	ERJ3GEYJ222V	2.2K 1/16W	[M]
R2823	ERJ3GEYJ222V	2.2K 1/16W	[M]
R2824	ERJ3GEYJ821V	820 1/16W	[M]
R2825	ERD2FCVJ4R7T	4.7 1/4W	[M]
R2826	ERJ3GEYJ681V	680 1/16W	[M]
R2827	ERJ3GEYJ471V	470 1/16W	[M]
R2828	ERJ3GEYJ272V	2.7K 1/16W	[M]
R2829	ERJ3GEYJ102V	1K 1/16W	[M]

PDF created with pdfFactory Pro trial version www.pdffactory.com

Ref. No.	Part No.	Part Name & Description	Remarks
R2830	ERJ3GEYJ272V	2.7K 1/16W	[M]
R2831	ERJ3GEYJ472V	4.7K 1/16W	[M]
R2832	ERJ3GEYJ151V	150 1/16W	[M]
R2833	ERJ3GEYJ102V	1K 1/16W	[M]
R2834	ERJ3GEYJ102V	1K 1/16W	[M]
R2835	ERJ3GEYJ681V	680 1/16W	[M]
R2837	ERJ3GEYJ561V	560 1/16W	[M]
R2838	ERJ3GEYJ272V	2.7K 1/16W	[M]
R2839	ERJ3GEYJ821V	820 1/16W	[M]
R2840	ERJ3GEYJ151V	150 1/16W	[M]
R2841	ERD2FCVJ4R7T	4.7 1/4W	[M]
R2842	ERJ3GEYJ182V	1.8K 1/16W	[M]
R2843	ERJ3GEYJ471V	470 1/16W	[M]
R2846	ERJ3GEYJ222V	2.2K 1/16W	[M]
R2847	ERJ3GEYJ222V	2.2K 1/16W	[M]
R2848	ERJ3GEYJ8R2V	8.2 1/16W	[M]
R2849	ERJ3GEYJ472V	4.7K 1/16W	[M]
R2850	ERJ3GEYJ393V	39K 1/16W	[M]
R2851	ERJ3GEYJ153V	15K 1/16W	[M]
R2854	ERJ3GEYJ101V	100 1/16W	[M]
R2855	ERJ3GEYJ102V	1K 1/16W	[M]
R2856	ERJ3GEYJ823V	82K 1/16W	[M]
R2861	ERJ3GEYJ103V	10K 1/16W	[M]
R2872	ERJ3GEYJ102V	1K 1/16W	[M]
R2873	ERJ3GEYJ273V	27K 1/16W	[M]
R2874	ERJ3GEYJ563V	56K 1/16W	[M]
R2878	ERJ3GEYJ1R0V	1 1/16W	[M]
R2879	ERJ3GEYJ1R0V	1 1/16W	[M]
R2880	ERJ3GEYJ1R0V	1 1/16W	[M]
R2881	ERJ3GEYJ1R0V	1 1/16W	[M]
R2882	ERJ3GEYJ1R0V	1 1/16W	[M]
R2883	ERJ3GEYJ1R0V	1 1/16W	[M]
R2884	ERJ3GEYJ1R0V	1 1/16W	[M]
R2885	ERJ3GEYJ1R0V	1 1/16W	[M]
R2886	D0HB750ZA003	75 3W	[M]
R2887	D0HB750ZA003	75 3W	[M]
R2888	D0HB750ZA003	75 3W	[M]
R2889	D0HB750ZA003	75 3W	[M]
R2890	D0HB750ZA003	75 3W	[M]
R2891	D0HB750ZA003	75 3W	[M]
R2892	ERJ3GEYJ103V	10K 1/16W	[M]GC GS
R2892	ERJ3GEYJ183V	18K 1/16W	[M]GN
R2893	ERJ3GEYJ153V	15K 1/16W	[M]
R2894	ERJ3GEYJ224V	220K 1/16W	[M]
R2895	ERJ3GEYJ103V	10K 1/16W	[M]
R2897	ERJ3GEYJ102V	1K 1/16W	[M]
R2898	ERJ3GEYJ331V	330 1/16W	[M]
R2903	ERJ3GEY0R00V	0 1/16W	[M]GC GS
R2904	ERJ3GEY0R00V	0 1/16W	[M]GC GS
R2905	ERJ3GEYJ1R0V	1 1/16W	[M]
R2916	ERJ3GEY0R00V	0 1/16W	[M]
R2917	ERJ3GEY0R00V	0 1/16W	[M]
R2918	ERJ3GEY0R00V	0 1/16W	[M]
R2919	ERJ3GEY0R00V	0 1/16W	[M]

PDF created with pdfFactory Pro trial version www.pdffactory.com

Ref. No.	Part No.	Part Name & Description	Remarks
R2920	ERJ3GEYJ103V	10K 1/16W	[M]
R2978	ERJ3GEYJ103V	10K 1/16W	[M]
R6005	ERJ3GEYJ681V	680 1/16W	[M]
R6006	ERJ3GEYJ102V	1K 1/16W	[M]
R6007	ERJ3GEYJ122V	1.2K 1/16W	[M]
R6008	ERJ3GEYJ182V	1.8K 1/16W	[M]
R6009	ERJ3GEYJ390V	39 1/16W	[M]
R6010	ERJ3GEYJ561V	560 1/16W	[M]
R6011	ERJ3GEYJ151V	150 1/16W	[M]
R6012	ERJ3GEYJ151V	150 1/16W	[M]
R6013	ERJ3GEYJ223V	22K 1/16W	[M]
R6015	ERJ3GEYJ102V	1K 1/16W	[M]
R6017	ERJ3GEYJ102V	1K 1/16W	[M]
R6019	ERJ3GEYJ680V	68 1/16W	[M]
R6020	ERJ3GEYJ681V	680 1/16W	[M]
R6022	ERJ3GEYJ102V	1K 1/16W	[M]
R6023	ERJ3GEYJ102V	1K 1/16W	[M]
R6024	ERJ3GEYJ122V	1.2K 1/16W	[M]
R6025	ERJ3GEYJ182V	1.8K 1/16W	[M]
R6026	ERJ3GEYJ222V	2.2K 1/16W	[M]
R6027	ERJ3GEYJ102V	1K 1/16W	[M]
R6028	ERJ3GEYJ223V	22K 1/16W	[M]
R6029	ERJ3GEYJ223V	22K 1/16W	[M]
R6030	ERJ3GEYJ223V	22K 1/16W	[M]
R6038	ERJ3GEYJ102V	1K 1/16W	[M]
R6050	ERJ3GEYJ2R7V	2.7 1/16W	[M]
R6051	ERJ3GEYJ2R7V	2.7 1/16W	[M]
R6080	ERJ3GEYJ681V	680 1/16W	[M]GC GS
R6081	ERJ3GEYJ681V	680 1/16W	[M]GC GS
R6082	ERJ3GEYJ561V	560 1/16W	[M]GC GS
R6083	ERJ3GEYJ472V	4.7K 1/16W	[M]GC GS
R6084	ERJ3GEYJ474V	470K 1/16W	[M]GC GS
R6085	ERJ3GEYJ822V	8.2K 1/16W	[M]GC GS
R6086	ERJ3GEYJ105V	1M 1/16W	[M]GC GS
R6087	ERJ3GEYJ101V	100 1/16W	[M]GC GS
R6088	ERJ3GEYJ472V	4.7K 1/16W	[M]GC GS
R6089	ERJ3GEYJ104V	100K 1/16W	[M]GC GS
R6090	ERJ3GEYJ152V	1.5K 1/16W	[M]GC GS
R6091	ERJ3GEYJ101V	100 1/16W	[M]GC GS
R6092	D0HB750ZA003	75 3W	[M]GC GS
R6095	ERJ3GEYJ680V	68 1/16W	[M]GC GS
R6099	ERJ3GEYJ272V	2.7K 1/16W	[M]
R8011	ERJ2GEJ220X	22 2W	[M]
R8021	ERJ2GEJ103X	10K 2W	[M]
R8022	ERJ2GEJ103X	10K 2W	[M]
R8023	ERJ2GEJ473X	47K 2W	[M]
R8041	ERJ2GEJ330X	33 2W	[M]
R8111	ERJ2GEJ223X	22K 2W	[M]
R8112	ERJ2GEJ223X	22K 2W	[M]
R8201	ERJ2GEJ222X	2.2K 2W	[M]
R8231	ERJ2GEJ103X	10K 2W	[M]
R8233	ERJ2GEJ153X	15K 2W	[M]
R8235	ERJ2GEJ822X	8.2K 2W	[M]
R8236	ERJ2GEJ822X	8.2K 2W	[M]

PDF created with pdfFactory Pro trial version www.pdffactory.com

Ref. No.	Part No.	Part Name & Description	Remarks
R8241	ERJ2GEJ223X	22K 2W	[M]
R8242	ERJ2GEJ752X	7.5K 2W	[M]
R8243	ERJ2GEJ103X	10K 2W	[M]
R8251	ERJ6GEYJ6R8V	6.8 1/10W	[M]
R8261	ERJ2GEJ823X	82K 2W	[M]
R8262	ERJ2GEJ472X	4.7K 2W	[M]
R8263	ERJ2GEJ823X	82K 2W	[M]
R8264	ERJ2GEJ472X	4.7K 2W	[M]
R8265	ERJ2GE0R00X	0 2W	[M]
R8311	ERJ2RHD242X	2.4K 2W	[M]
R8312	ERJ2RHD102X	1K 2W	[M]
R8313	ERJ2RHD243X	24K 2W	[M]
R8314	ERJ2GE0R00X	0 2W	[M]
R8315	ERJ2GEJ6R8X	6.8 2W	[M]
R8321	ERJ3RBD161V	160 3W	[M]
R8322	ERJ2RKD100X	10 2W	[M]
R8325	ERJ3RBD161V	160 3W	[M]
R8326	ERJ2GEJ100X	10 2W	[M]
R8331	ERJ3RBD161V	160 3W	[M]
R8332	ERJ2RKD100X	10 2W	[M]
R8335	ERJ3RED820V	82 3W	[M]
R8341	ERJ3RED820V	82 3W	[M]
R8401	ERJ2GEJ473X	47K 2W	[M]
R8402	ERJ2GEJ101X	100 2W	[M]
R8404	ERJ2GEJ101X	100 2W	[M]
R8407	ERJ2GEJ101X	100 2W	[M]
R8420	ERJ2GEJ222X	2.2K 2W	[M]
R8421	ERJ2GE0R00X	0 2W	[M]
R8501	ERJ2GE0R00X	0 2W	[M]
R8505	ERJ2GEJ222X	2.2K 2W	[M]
R8506	ERJ2GEJ152X	1.5K 2W	[M]
R8550	ERJ2GEJ752X	7.5K 2W	[M]
R8551	ERJ2GE0R00X	0 2W	[M]
R8552	ERJ2GEJ102X	1K 2W	[M]
R8553	ERJ2GEJ102X	1K 2W	[M]
R8554	ERJ2GEJ680X	68 2W	[M]
R8555	ERJ2GEJ2R2X	2.2 2W	[M]
R8556	ERJ3GEYJ560V	56 1/16W	[M]
R8557	ERJ3GEYJ510V	51 1/16W	[M]
R8558	ERJ2GEJ473X	47K 2W	[M]
R8559	ERJ2GEJ153X	15K 2W	[M]
R8560	ERJ2GEJ102X	1K 2W	[M]
R8561	ERJ2GE0R00X	0 2W	[M]
R8562	ERJ2GEJ102X	1K 2W	[M]
R8563	ERJ2GEJ102X	1K 2W	[M]
R8564	ERJ2GEJ220X	22 2W	[M]
R8565	ERJ2GEJ2R2X	2.2 2W	[M]
R8566	ERJ3GEYJ560V	56 1/16W	[M]
R8567	ERJ3GEYJ510V	51 1/16W	[M]
R8568	ERJ2GEJ473X	47K 2W	[M]
R8569	ERJ2GEJ123X	12K 2W	[M]
R8570	ERJ2GEJ104X	100K 2W	[M]
R8601	ERJ2GEJ102X	1K 2W	[M]
R8606	ERJ2GEJ104X	100K 2W	[M]

PDF created with pdfFactory Pro trial version www.pdffactory.com

Ref. No.	Part No.	Part Name & Description	Remarks
R8607	ERJ2GEJ103X	10K 2W	[M]
R8611	ERJ2GEJ101X	100 2W	[M]
R8621	ERJ2GEJ105X	1M 2W	[M]
R8622	ERJ2RHD102X	1K 2W	[M]
K8003	ERJ2GE0R00X	CHIP JUMPER	[M]
K8008	ERJ2GE0R00X	CHIP JUMPER	[M]
K8031	ERJ2GE0R00X	CHIP JUMPER	[M]
K8106	ERJ3GEY0R00V	CHIP JUMPER	[M]
K8421	ERJ3GEY0R00V	CHIP JUMPER	[M]
RX8011	D1H88204A024	CHIP RESISTOR	[M]
RX8012	D1H88204A024	CHIP RESISTOR	[M]
RX8013	D1H88204A024	CHIP RESISTOR	[M]
RX8014	D1H88204A024	CHIP RESISTOR	[M]
RX8015	D1H422020001	CHIP RESISTOR	[M]
RX8016	D1H88204A024	CHIP RESISTOR	[M]
RX8017	D1H88204A024	CHIP RESISTOR	[M]
RX8018	D1H88204A024	CHIP RESISTOR	[M]
RX8021	D1H410320002	CHIP RESISTOR	[M]
RX8031	D1H447220001	CHIP RESISTOR	[M]
RX8032	D1H447220001	CHIP RESISTOR	[M]
RX8401	D1H410120001	CHIP RESISTOR	[M]
RX8402	D1H410120001	CHIP RESISTOR	[M]
RX8501	D1H456020001	CHIP RESISTOR	[M]
RX8502	D1H85604A024	CHIP RESISTOR	[M]
RX8503	D1H456020001	CHIP RESISTOR	[M]
RX8504	D1H456020001	CHIP RESISTOR	[M]
RX8611	D1H447220001	CHIP RESISTOR	[M]
		CAPACITORS	
C984	ECA1EAK100XE	10 50V	[M]
C2000	ECJ1VB1C104K	0.1 16V	[M]
C2001	ECJ1VB1C104K	0.1 16V	[M]
C2003	ECEA1AKA220B	22 10V	[M]
C2004	ECJ1VB1E103K	0.01 25V	[M]
C2005	ECA1AM102B	1000 10V	[M]
C2006	ECEA1HKA2R2B	2.2 50V	[M]
C2007	ECJ1VB1C104K	0.1 16V	[M]
C2008	ECJ1VB1C104K	0.1 16V	[M]
C2009	ECEA0JKA101B	100 6.3V	[M]
C2019	ECJ1VB1H331K	330P 50V	[M]
C2020	ECJ1VB1H331K	330P 50V	[M]
C2021	ECJ1VB1H331K	330P 50V	[M]
C2022	ECJ1VB1H223K	0.022 50V	[M]
C2028	ECJ1VB1A105K	10 10V	[M]
C2029	ECJ1VB1A105K	10 10V	[M]
C2032	ECJ1VB1C104K	0.1 16V	[M]
C2034	ECJ1VB1C104K	0.1 16V	[M]
C2035	ECJ1VB1H103K	0.01 50V	[M]
C2036	ECEA1HKA220I	22 50V	[M]
C2037	ECJ1VB1H103K	0.01 50V	[M]
C2038	ECEA1AKA221I	220 10V	[M]

PDF created with pdfFactory Pro trial version www.pdffactory.com

Ref. No.	Part No.	Part Name & Description	Remarks
C2039	ECJ1VB1H103K	0.01 50V	[M]
C2040	ECA0JM102B	1000 6.3V	[M]
C2042	ECA0JM102B	1000 6.3V	[M]
C2044	ECA0JM102B	1000 6.3V	[M]
C2046	ECA0JM331I	330 6.3V	[M]
C2047	ECA0JM331I	330 6.3V	[M]
C2053	ECJ1VB1E103K	0.01 25V	[M]
C2090	ECJ1VB1E103K	0.01 25V	[M]
C2099	ECEA1HKN4R7B	4.7 50V	[M]
C2101	ECJ1VB1H223K	0.022 50V	[M]
C2102	ECJ1VB1C393K	0.039 16V	[M]
C2106	ECEA1HKA4R7I	4.7 50V	[M]
C2107	ECEA1HKA3R3I	3.3 50V	[M]
C2109	ECJ1VC1H470J	47P 50V	[M]GC GS
C2110	ECJ1VC1H101K	100P 50V	[M]GC GS
C2112	ECJ1VC1H471J	470P 50V	[M]
C2121	ECJ1VC1H151K	150P 50V	[M]
C2122	ECJ1VC1H391K	390P 50V	[M]
C2123	ECEA1HKA100I	10 50V	[M]
C2124	ECJ1VC1H101K	100P 50V	[M]
C2125	ECJ1VC1H330J	33P 50V	[M]
C2126	ECJ1VB1E103K	0.01 25V	[M]
C2127	ECJ1VB1A105K	10 10V	[M]
C2128	ECJ1VB1A105K	10 10V	[M]
C2130	ECJ1VB1A154K	0.15 10V	[M]
C2131	ECJ1VB1H332K	3300P 50V	[M]
C2133	ECJ1VB1A105K	10 10V	[M]
C2136	ECJ1VC1H221J	220P 50V	[M]
C2137	ECJ1VB1C104K	0.1 16V	[M]
C2138	ECJ1VC1H221J	220P 50V	[M]
C2139	ECJ1VC1H101K	100P 50V	[M]
C2140	ECJ1VB1H681K	680P 50V	[M]
C2141	ECJ1VC1H101K	100P 50V	[M]
C2149	ECJ1VB1A105K	10 10V	[M]
C2150	ECEA1HKA010I	1 50V	[M]
C2151	ECJ1VC1H101K	100P 50V	[M]
C2152	ECJ1VC1H470J	47P 50V	[M]
C2153	ECA1CM101B	100 16V	[M]
C2154	ECJ1VB1E103K	0.01 25V	[M]
C2155	ECJ1VB1H102K	1000P 50V	[M]
C2156	ECJ1VB1A105K	10 10V	[M]
C2157	ECEA1HKA010B	1 50V	[M]
C2160	ECJ1VB1H471K	470P 50V	[M]
C2161	ECJ1VB1C104K	0.1 16V	[M]
C2162	ECJ1VB1A154K	0.15 10V	[M]
C2163	ECEA1HKA3R3B	3.3 50V	[M]
C2164	ECJ1VB1H272K	2700P 50V	[M]
C2165	ECJ1VB1A124K	0.12 10V	[M]
C2166	ECJ1VB1A124K	0.12 10V	[M]
C2167	ECEA1HKA4R7I	4.7 50V	[M]
C2168	ECEA1HKA3R3I	3.3 50V	[M]
C2169	ECJ1VB1H471K	470P 50V	[M]
C2170	ECEA1HKA4R7I	4.7 50V	[M]
C2175	ECJ1VB1C333K	0.033 16V	[M]

PDF created with pdfFactory Pro trial version www.pdffactory.com

Ref. No.	Part No.	Part Name & Description	Remarks
C2178	ECJ1VC1H221J	220P 50V	[M]
C2201	ECJ1VB1H223K	0.022 50V	[M]
C2202	ECJ1VB1C393K	0.039 16V	[M]
C2206	ECEA1HKA4R7I	4.7 50V	[M]
C2207	ECEA1HKA3R3I	3.3 50V	[M]
C2209	ECJ1VC1H470J	47P 50V	[M]GC GS
C2210	ECJ1VB1H223K	0.022 50V	[M]
C2211	ECJ1VB1C823K	0.082 16V	[M]
C2212	ECJ1VC1H471J	470P 50V	[M]
C2213	ECJ1VC1H470J	47P 50V	[M]GC GS
C2214	ECJ1VC1H101K	100P 50V	[M]GC GS
C2215	ECJ1VB1H103K	0.01 50V	[M]GC GS
C2219	ECJ1VB1A124K	0.12 10V	[M]
C2220	ECJ1VB1A124K	0.12 10V	[M]
C2221	ECJ1VC1H151K	150P 50V	[M]
C2222	ECJ1VC1H391K	390P 50V	[M]
C2223	ECEA1HKA100I	10 50V	[M]
C2224	ECJ1VC1H101K	100P 50V	[M]
C2225	ECJ1VC1H330J	33P 50V	[M]
C2226	ECJ1VB1E103K	0.01 25V	[M]
C2227	ECJ1VB1A105K	10 10V	[M]
C2228	ECJ1VB1A154K	0.15 10V	[M]
C2229	ECJ1VB1A105K	10 10V	[M]
C2231	ECJ1VB1A105K	10 10V	[M]
C2232	ECJ1VB1H332K	3300P 50V	[M]
C2236	ECJ1VC1H221J	220P 50V	[M]
C2237	ECJ1VB1C104K	0.1 16V	[M]
C2238	ECJ1VC1H221J	220P 50V	[M]
C2239	ECJ1VC1H101K	100P 50V	[M]
C2240	ECJ1VB1H681K	680P 50V	[M]
C2241	ECJ1VC1H101K	100P 50V	[M]
C2249	ECJ1VB1A105K	10 10V	[M]
C2250	ECEA1HKA010I	1 50V	[M]
C2251	ECJ1VC1H101K	100P 50V	[M]
C2252	ECJ1VC1H470J	47P 50V	[M]
C2253	ECA1CM101B	100 16V	[M]
C2254	ECJ1VB1E103K	0.01 25V	[M]
C2255	ECJ1VB1H102K	1000P 50V	[M]
C2256	ECJ1VB1A105K	10 10V	[M]
C2257	ECEA1HKA010B	1 50V	[M]
C2260	ECJ1VB1H471K	470P 50V	[M]
C2261	ECJ1VB1C104K	0.1 16V	[M]
C2262	ECJ1VB1A154K	0.15 10V	[M]
C2263	ECEA1HKA3R3I	3.3 50V	[M]
C2264	ECEA1HKA100I	10 50V	[M]
C2265	ECJ1VB1H272K	2700P 50V	[M]
C2266	ECEA1HKA4R7I	4.7 50V	[M]
C2267	ECEA1HKA4R7I	4.7 50V	[M]
C2270	ECJ1VB1C333K	0.033 16V	[M]
C2278	ECJ1VC1H221J	220P 50V	[M]
C2300	ECEA1CKA100B	10 16V	[M]
C2301	ECJ1VB1H471K	470P 50V	[M]
C2302	ECJ1VB1A105K	10 10V	[M]
C2303	ECEA1HKA3R3B	3.3 50V	[M]

PDF created with pdfFactory Pro trial version www.pdffactory.com

Ref. No.	Part No.	Part Name & Description	Remarks
C2310	ECJ1VB1H223K	0.022 50V	[M]
C2311	ECEA1HKA4R7I	4.7 50V	[M]
C2320	ECJ1VB1A224K	0.22 10V	[M]
C2400	ECEA1HKA100B	10 50V	[M]
C2401	ECJ1VB1A105K	10 10V	[M]
C2402	ECJ1VB1H471K	470P 50V	[M]
C2403	ECJ1VB1A105K	10 10V	[M]
C2404	ECEA1HKA3R3B	3.3 50V	[M]
C2405	ECJ1VB1A105K	10 10V	[M]
C2500	ECEA1CKA100B	10 16V	[M]
C2501	ECEA1HKA4R7I	4.7 50V	[M]
C2502	ECEA1HKA010I	1 50V	[M]
C2503	ECJ1VB1C333K	0.033 16V	[M]
C2504	ECJ1VB1C683K	0.068 16V	[M]
C2505	ECEA1HKA010I	1 50V	[M]
C2506	ECJ1VB1E103K	0.01 25V	[M]
C2507	ECJ1VB1H471K	470P 50V	[M]
C2508	ECEA1HKA4R7I	4.7 50V	[M]
C2511	ECJ1VB1A105K	10 10V	[M]
C2521	ECJ1VB1A105K	10 10V	[M]
C2522	ECJ1VB1A105K	10 10V	[M]
C2600	ECJ1VB1A105K	10 10V	[M]
C2602	ECEA1HKA100I	10 50V	[M]
C2603	ECEA1HKA100I	10 50V	[M]
C2604	ECJ1VB1H222K	2200P 50V	[M]
C2605	ECJ1VB1A474K	0.47 10V	[M]
C2606	ECJ1VB1A124K	0.12 10V	[M]
C2607	ECJ1VB1A474K	0.47 10V	[M]
C2608	ECJ1VB1C104K	0.1 16V	[M]
C2609	ECJ1VB1H562K	5600P 50V	[M]
C2610	ECEA1HKA100B	10 50V	[M]
C2611	ECEA1HKA4R7I	4.7 50V	[M]
C2612	ECEA1HKA4R7I	4.7 50V	[M]
C2613	ECJ1VB1E103K	0.01 25V	[M]
C2615	ECJ1VB1H562K	5600P 50V	[M]
C2616	ECEA1CKA100I	10 16V	[M]
C2617	ECEA1HKA100I	10 50V	[M]
C2618	ECJ1VB1C683K	0.068 16V	[M]
C2619	ECJ1VB1A474K	0.47 10V	[M]
C2620	ECJ1VB1H104K	0.1 50V	[M]
C2621	ECJ1VC1H330J	33P 50V	[M]
C2622	ECJ1VC1H101K	100P 50V	[M]GC GS
C2623	ECJ1VC1H470J	47P 50V	[M]GC GS
C2624	ECJ1VB1A124K	0.12 10V	[M]GC GS
C2625	ECJ1VB1H103K	0.01 50V	[M]GC GS
C2627	ECEA1HKA100I	10 50V	[M]
C2628	ECEA1HKA010B	1 50V	[M]
C2630	ECEA1HKA100I	10 50V	[M]
C2631	ECEA1HKA4R7I	4.7 50V	[M]
C2632	ECJ1VC1H101K	100P 50V	[M]
C2633	ECJ1VC1H221J	220P 50V	[M]
C2635	ECJ1VB1H223K	0.022 50V	[M]
C2636	ECEA1HKA4R7I	4.7 50V	[M]
C2637	ECEA1HKA4R7I	4.7 50V	[M]

PDF created with pdfFactory Pro trial version www.pdffactory.com

Ref. No.	Part No.	Part Name & Description	Remarks
C2702	ECEA1HKA4R7B	4.7 50V	[M]GC GS
C2703	ECEA1HKA010I	1 50V	[M]GC GS
C2705	ECJ1VB1H471K	470P 50V	[M]GC GS
C2706	ECJ1VB1H102K	1000P 50V	[M]GC GS
C2801	ECJ1VC1H101K	100P 50V	[M]
C2802	ECA1EM221B	220 25V	[M]
C2803	ECJ1VC1H101K	100P 50V	[M]
C2804	ECJ1VC1H101K	100P 50V	[M]
C2805	ECJ1VC1H101K	100P 50V	[M]
C2806	EEUFC0J821B	820P 6.3V	[M]
C2807	ECJ1VC1H101K	100P 50V	[M]
C2808	ECJ1VC1H101K	100P 50V	[M]
C2809	ECEA1EKA330B	33 25V	[M]
C2810	ECJ1VC1H101K	100P 50V	[M]
C2811	ECJ1VB1H103K	0.01 50V	[M]
C2812	ECJ1VC1H101K	100P 50V	[M]
C2813	ECEA1AKA221I	220 10V	[M]
C2814	ECJ1VC1H101K	100P 50V	[M]
C2815	ECJ1VB1H103K	0.01 50V	[M]
C2816	ECJ1VC1H221J	220P 50V	[M]
C2817	ECEA0JKA221B	220 6.3V	[M]
C2818	ECJ1VC1H221J	220P 50V	[M]
C2819	ECJ1VB1A105K	10 10V	[M]
C2820	ECJ1VB1E103K	0.01 25V	[M]
C2821	ECEA0JKA470B	47 6.3V	[M]
C2822	ECJ1VB1E103K	0.01 25V	[M]
C2823	ECJ1VB1A105K	10 10V	[M]
C2824	ECJ1VB1A105K	10 10V	[M]
C2825	ECA0JM331B	330 6.3V	[M]
C2826	ECQB1H104JF4	0.1 50V	[M]
C2827	ECEA1HKA100I	10 50V	[M]
C2828	ECA1HM101B	100 50V	[M]
C2829	ECA1HM101B	100 50V	[M]
C2830	F2A1E1020065	1000P 25V	[M]
C2831	ECEA1CKA470B	47 16V	[M]
C2832	F2A1E1020065	1000P 25V	[M]
C2833	ECEA1CKA470B	47 16V	[M]
C2834	ECA1HM101B	100 50V	[M]
C2835	ECA1HM101B	100 50V	[M]
C2836	ECA1CM101B	100 16V	[M]
C2837	ECJ1VB1H103K	0.01 50V	[M]
C2838	ECJ1VB1H103K	0.01 50V	[M]
C2839	ECEA1AKA330B	33 10V	[M]
C2840	ECJ1VB1C104K	0.1 16V	[M]
C2841	ECA1EM472B	4700 25V	[M]
C2842	ECJ1VB1A105K	10 10V	[M]
C2844	ECJ1VB1H103K	0.01 50V	[M]
C2845	ECJ1VB1C104K	0.1 16V	[M]
C2846	ECA1EM101B	100 25V	[M]
C2847	ECJ1VB1H103K	0.01 50V	[M]
C2848	ECA1CM101B	100 16V	[M]
C2851	ECJ1VB1H103K	0.01 50V	[M]
C2853	ECEA1HKN4R7B	4.7 50V	[M]
C2854	ECA1EM101B	100 25V	[M]

PDF created with pdfFactory Pro trial version www.pdffactory.com

Ref. No.	Part No.	Part Name & Description	Remarks
C2855	ECA1EM101B	100 25V	[M]
C2856	ECA1HM101B	100 50V	[M]
C2857	ECJ1VB1A225K	22 10V	[M]
C2858	ECJ1VB1A225K	22 10V	[M]
C2859	ECJ1VB1H103K	0.01 50V	[M]
C2859	ECJ1VC1H101K	100P 50V	[M]GC GS
C2901	ECEA1HKA010I	1 50V	[M]GC GS
C6000	ECJ1VB1H473K	0.047 50V	[M]
C6001	ECJ1VB1H473K	0.047 50V	[M]
C6002	ECJ1VB1H102K	1000P 50V	[M]
C6003	ECEA1HKA220B	22 50V	[M]
C6005	ECEA1HKA220B	22 50V	[M]
C6006	ECJ1VB1H102K	1000P 50V	[M]
C6007	ECEA1HKA100B	10 50V	[M]
C6008	ECEA0JKS470B	47 6.3V	[M]
C6009	ECJ1VB1H103K	0.01 50V	[M]
C6011	ECEA0JKS101B	100 6.3V	[M]
C6012	ECJ1VB1H103K	0.01 50V	[M]
C6014	ECJ1VC1H101K	100P 50V	[M]
C6015	ECJ1VC1H101K	100P 50V	[M]
C6016	ECJ1VC1H101K	100P 50V	[M]
C6017	ECJ1VC1H101K	100P 50V	[M]
C6021	ECJ1VC1H101K	100P 50V	[M]
C6022	ECJ1VC1H101K	100P 50V	[M]
C6068	ECEA1HKA4R7B	4.7 50V	[M]GC GS
C6070	ECEA1HKA4R7B	4.7 50V	[M]GC GS
C6071	ECJ1VB1H102K	1000P 50V	[M]GC GS
C6072	ECJ1VB1H471K	470P 50V	[M]GC GS
C6074	ECJ1VB1H102K	1000P 50V	[M]GC GS
C6076	ECEA1HKA010B	1 50V	[M]GC GS
C6077	ECJ1VB1C333K	0.033 16V	[M]GC GS
C6078	ECEA1HKA010B	1 50V	[M]GC GS
C6079	ECJ1VB1H102K	1000P 50V	[M]GC GS
C6080	ECJ1VC1H101K	100P 50V	[M]GC GS
C6082	ECEA1HKA010B	1 50V	[M]GC GS
C6086	ECJ1VB1H102K	1000P 50V	[M]GC GS
C6087	ECEA1AKA221B	220 10V	[M]GC GS
C6092	ECJ1VB1H104K	0.1 50V	[M]GC GS
C6093	ECJ1VB1H104K	0.1 50V	[M]GC GS
C8001	F2G0J101A066	100P 6.3V	[M]
C8002	F2G0G331A012	330P 4V	[M]
C8003	ECJ0EB1E222K	2200P 25V	[M]
C8004	ECJ0EF1C104Z	0.1 16V	[M]
C8005	ECJ0EF1C104Z	0.1 16V	[M]
C8006	ECJ0EF1C104Z	0.1 16V	[M]
C8007	ECJ0EF1C104Z	0.1 16V	[M]
C8008	ECJ0EF1C104Z	0.1 16V	[M]
C8009	ECJ0EF1C104Z	0.1 16V	[M]
C8010	ECJ0EF1C104Z	0.1 16V	[M]
C8011	ECJ1VB0J105K	10 6.3V	[M]
C8012	ECJ0EF1C104Z	0.1 16V	[M]
C8013	ECJ0EF1C104Z	0.1 16V	[M]
C8014	ECJ0EF1C104Z	0.1 16V	[M]
C8015	ECJ1VB0J105K	10 6.3V	[M]

PDF created with pdfFactory Pro trial version www.pdffactory.com

Ref. No.	Part No.	Part Name & Description	Remarks
C8016	ECJ1VB0J105K	10 6.3V	[M]
C8017	ECJ0EF1C104Z	0.1 16V	[M]
C8018	ECJ0EF1C104Z	0.1 16V	[M]
C8019	ECJ1VB0J105K	10 6.3V	[M]
C8020	ECJ0EF1C104Z	0.1 16V	[M]
C8021	ECJ0EF1C104Z	0.1 16V	[M]
C8022	ECJ0EF1C104Z	0.1 16V	[M]
C8023	ECJ1VB0J105K	10 6.3V	[M]
C8024	ECJ1VB0J105K	10 6.3V	[M]
C8025	ECJ0EF1C104Z	0.1 16V	[M]
C8026	ECJ0EB1E222K	2200P 25V	[M]
C8027	ECJ0EF1C104Z	0.1 16V	[M]
C8028	ECJ1VB0J105K	10 6.3V	[M]
C8031	ECJ0EF1C104Z	0.1 16V	[M]
C8051	ECJ1VB0J105K	10 6.3V	[M]
C8052	ECJ0EF1C104Z	0.1 16V	[M]
C8053	ECJ0EC1H221J	220P 50V	[M]
C8054	ECJ1VB0J105K	10 6.3V	[M]
C8055	ECJ1VB0J105K	10 6.3V	[M]
C8056	ECJ0EF1C104Z	0.1 16V	[M]
C8057	ECJ0EB1E222K	2200P 25V	[M]
C8111	ECJ0EB1A104K	0.1 10V	[M]
C8112	ECJ1VB0J105K	10 6.3V	[M]
C8113	ECJ0EB1E471K	470P 25V	[M]
C8201	F2H0J101A003	100P 6.3V	[M]
C8202	F2G0J101A066	100P 6.3V	[M]
C8203	ECJ0EF1C104Z	0.1 16V	[M]
C8204	ECJ0EF1C104Z	0.1 16V	[M]
C8205	ECJ0EF1C104Z	0.1 16V	[M]
C8206	ECJ1VB0J105K	10 6.3V	[M]
C8207	ECJ1VF1C104Z	0.1 16V	[M]
C8208	ECJ0EF1C104Z	0.1 16V	[M]
C8211	ECJ0EB1A333K	0.033 10V	[M]
C8212	ECJ0EF1C104Z	0.1 16V	[M]
C8213	ECJ0EF1C104Z	0.1 16V	[M]
C8214	ECJ0EF1C104Z	0.1 16V	[M]
C8215	ECJ0EB1E562K	5600P 25V	[M]
C8216	ECJ0EB1C183K	0.018 16V	[M]
C8217	ECJ1VB0J105K	10 6.3V	[M]
C8218	ECJ1VB0J105K	10 6.3V	[M]
C8221	ECJ0EB1A104K	0.1 10V	[M]
C8222	ECJ0EB1A104K	0.1 10V	[M]
C8223	ECJ0EB1A104K	0.1 10V	[M]
C8224	ECJ0EB1A104K	0.1 10V	[M]
C8225	ECJ0EF1C104Z	0.1 16V	[M]
C8226	ECJ0EF1C104Z	0.1 16V	[M]
C8227	ECJ0EF1C104Z	0.1 16V	[M]
C8228	ECJ1VB0J105K	10 6.3V	[M]
C8229	ECJ1VB0J105K	10 6.3V	[M]
C8232	ECJ1VF1C104Z	0.1 16V	[M]
C8233	ECJ0EB1E472K	4700P 25V	[M]
C8234	ECJ0EF1C104Z	0.1 16V	[M]
C8235	ECJ0EB1H102K	1000P 50V	[M]
C8236	ECJ0EB1H102K	1000P 50V	[M]

PDF created with pdfFactory Pro trial version www.pdffactory.com

Ref. No.	Part No.	Part Name & Description	Remarks
C8237	ECJ0EB1H102K	1000P 50V	[M]
C8238	ECJ0EB1H821K	820P 50V	[M]
C8241	ECJ0EB1A104K	0.1 10V	[M]
C8242	ECJ0EB1A104K	0.1 10V	[M]
C8251	F2G0J221A065	220P 6.3V	[M]
C8252	F2G1C470A076	47P 16V	[M]
C8253	F2H1C220A003	22P 16V	[M]
C8254	ECJ0EF1C104Z	0.1 16V	[M]
C8255	ECJ0EF1C104Z	0.1 16V	[M]
C8256	ECJ0EF1C104Z	0.1 16V	[M]
C8257	ECJ0EF1C104Z	0.1 16V	[M]
C8261	ECJ0EF1C104Z	0.1 16V	[M]
C8262	ECJ0EF1C104Z	0.1 16V	[M]
C8301	F2H0J2210006	220P 6.3V	[M]
C8302	F2H0J330A003	33P 6.3V	[M]
C8303	ECJ0EF1C104Z	0.1 16V	[M]
C8304	ECJ1VB0J105K	10 6.3V	[M]
C8307	ECJ0EF1C104Z	0.1 16V	[M]
C8308	ECJ0EC1H150J	15P 50V	[M]
C8311	ECJ0EF1C104Z	0.1 16V	[M]
C8312	ECJ1VB0J105K	10 6.3V	[M]
C8421	F2G0J101A083	100P 6.3V	[M]
C8422	ECJ0EF1C104Z	0.1 16V	[M]
C8423	F2G0J330A083	33P 6.3V	[M]
C8424	ECJ0EF1C104Z	0.1 16V	[M]
C8426	ECJ0EF1C104Z	0.1 16V	[M]
C8427	ECJ0EF1C104Z	0.1 16V	[M]
C8428	ECJ0EF1C104Z	0.1 16V	[M]
C8501	ECJ3YB1A106M	10 10V	[M]
C8502	ECJ0EF1C104Z	0.1 16V	[M]
C8503	ECJ0EF1C104Z	0.1 16V	[M]
C8504	ECJ0EF1C104Z	0.1 16V	[M]
C8505	ECJ0EC1H221J	220P 50V	[M]
C8506	ECJ0EC1H101J	100P 50V	[M]
C8550	F2H0J330A003	33P 6.3V	[M]
C8551	ECJ0EF1C104Z	0.1 16V	[M]
C8552	F2G1C100A072	10P 16V	[M]
C8553	F2H0J470A003	47P 6.3V	[M]
C8554	ECJ1VB0J105K	10 6.3V	[M]
C8561	ECJ0EF1C104Z	0.1 16V	[M]
C8562	F2G1C100A072	10P 16V	[M]
C8563	F2H0J470A003	47P 6.3V	[M]
C8564	ECJ1VB0J105K	10 6.3V	[M]
C8601	ECJ0EF1C104Z	0.1 16V	[M]
C8606	ECJ0EF1C104Z	0.1 16V	[M]
C8607	ECJ0EB0J224K	0.22 6.3V	[M]
C8611	ECJ0EF1C104Z	0.1 16V	[M]
C8621	ECJ0EC1H120J	12P 50V	[M]
C8622	ECJ0EC1H120J	12P 50V	[M]
C8651	ECJ0EF1C104Z	0.1 16V	[M]
C8652	ECJ0EF1C104Z	0.1 16V	[M]
C8691	ECJ0EF1C104Z	0.1 16V	[M]
C8695	ECJ0EF1C104Z	0.1 16V	[M]

PDF created with pdfFactory Pro trial version www.pdffactory.com

28.3. Packing Materials & Accessories Parts List

Ref. No.	Part No.	Part Name & Description	Remarks
		PACKING MATERIALS	
P1	RPGX1446	PACKING CASE	[M]GC
P1	RPGX1447	PACKING CASE	[M]GS
P1	RPGX1449	PACKING CASE	[M]GN
P2	RPNX0316	POLYFOAM	[M]
P3	RPFX0058	MIRAMAT SHEET	[M]
		ACCESSORIES	
A1	EUR7722XC0	REMOTE CONTROL	[M]
A1-1	UR76EC3103A	R/C BATTERY COVER	[M]
A2	K2CJ2DA00010	AC CORD	[M] ⚠ GN
A2	K2CQ2CA00002	AC CORD	[M] ⚠ GC GS
A2	RJA0053-3X	AC CORD	[M] ⚠ GS
A3	RQT7978-1B	O/I BOOK[En]	[M]
A3	RQT7979-G	O/I BOOK[Cn][Ar]	[M]GC GS
A4	RSA0007-L	FM INDOOR ANTENNA	[M]
A5	K1HA25HA0001	SYSTEM CABLE	[M]
A6	N1DAAAA00001	AM LOOP ANTENNA	[M]
A7	K2KA2BA00001	VIDEO CABLE	[M]
A8	RQCA1029	SPEAKER LABEL	[M]
A9	REE1203A-1J	SPEAKER CABLE	[M]

28.4. Packaging

PDF created with pdfFactory Pro trial version www.pdffactory.com

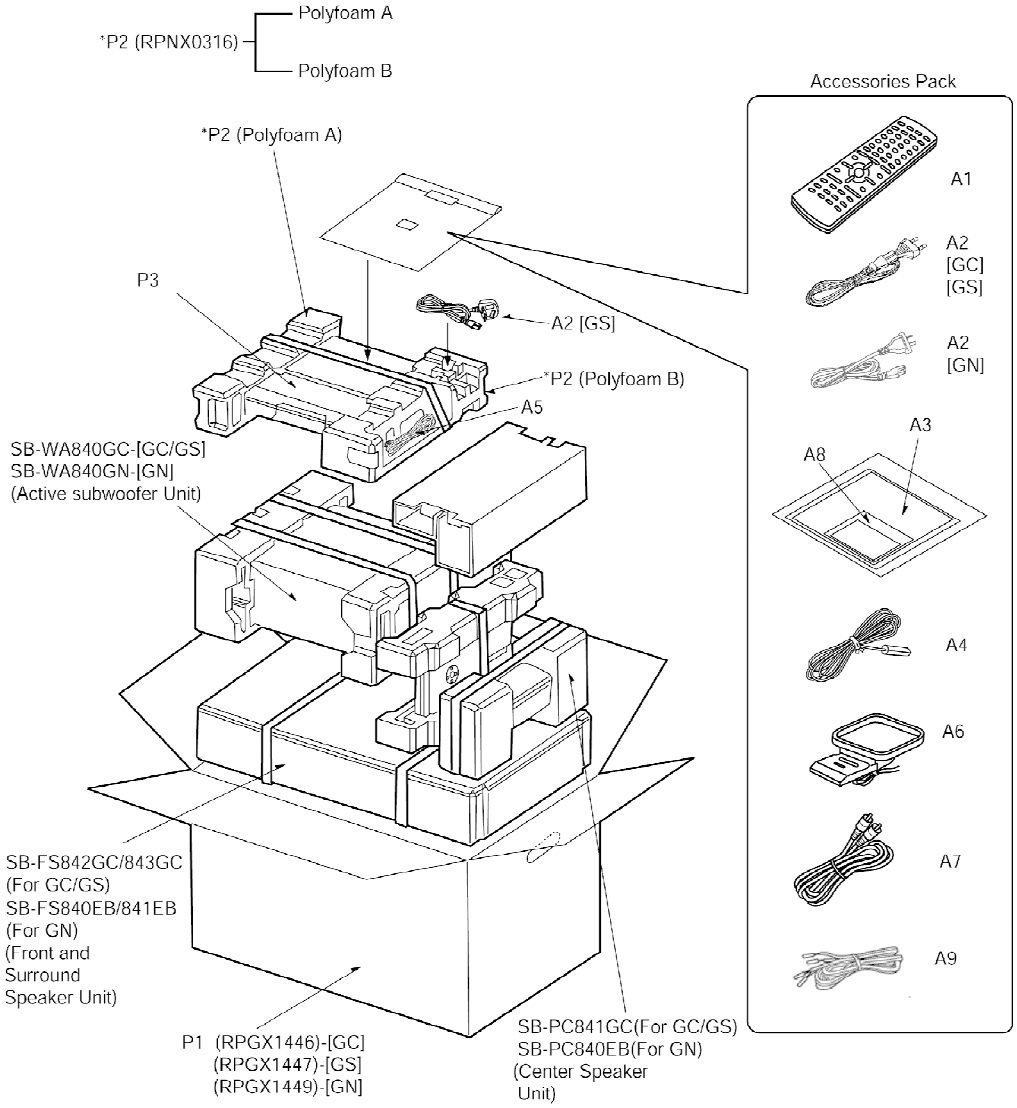

29. Schematic Diagram for printing with A4

PDF created with pdfFactory Pro trial version www.pdffactory.com

SCHEMATIC DIAGRAM-1

A DVD MODULE CIRCUIT

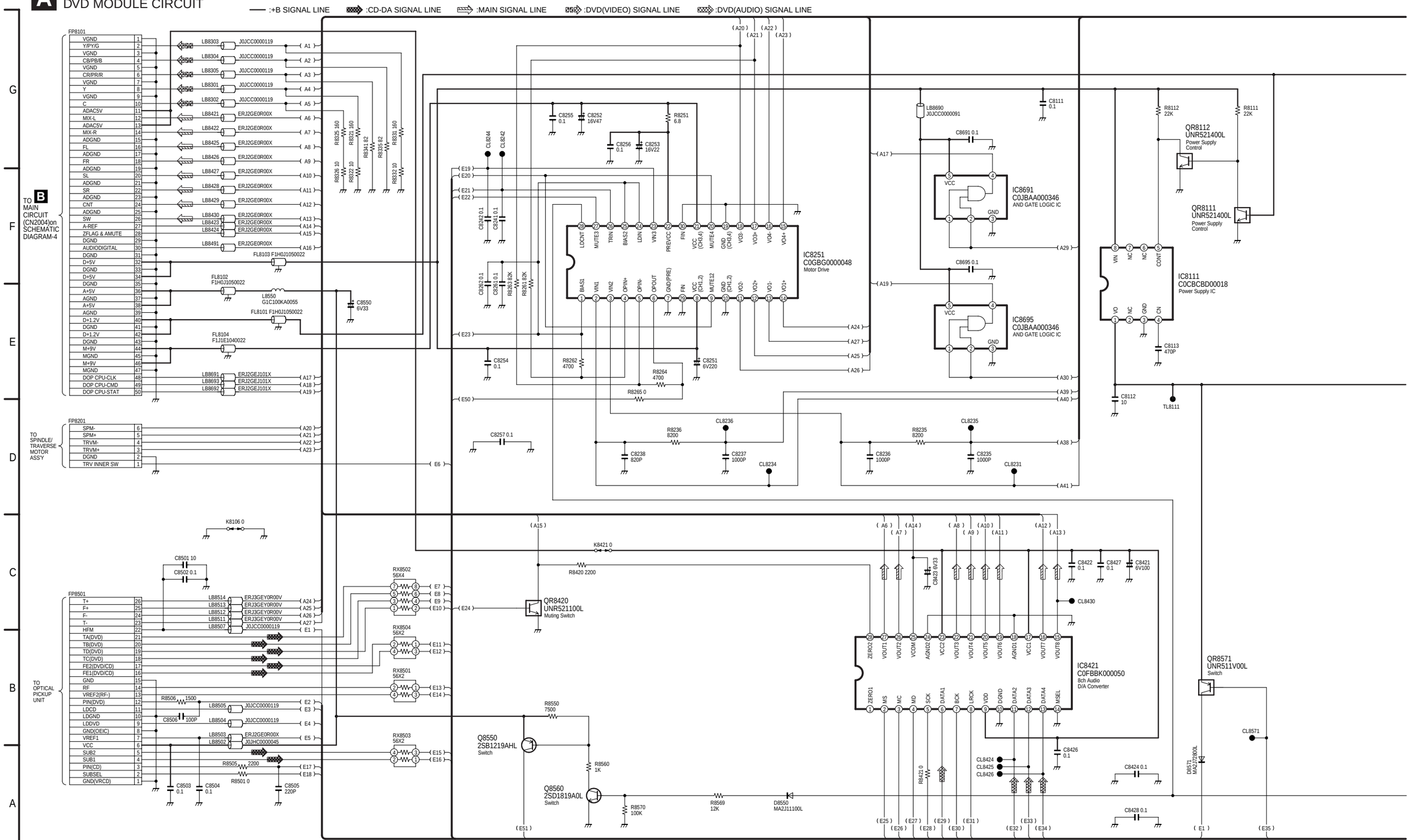

SCHEMATIC DIAGRAM-2

A DVD MODULE CIRCUIT

—— :+B SIGNAL LINE :CD-DA SIGNAL LINE :DVD(VIDEO) SIGNAL LINE :DVD(AUDIO) SIGNAL LINE

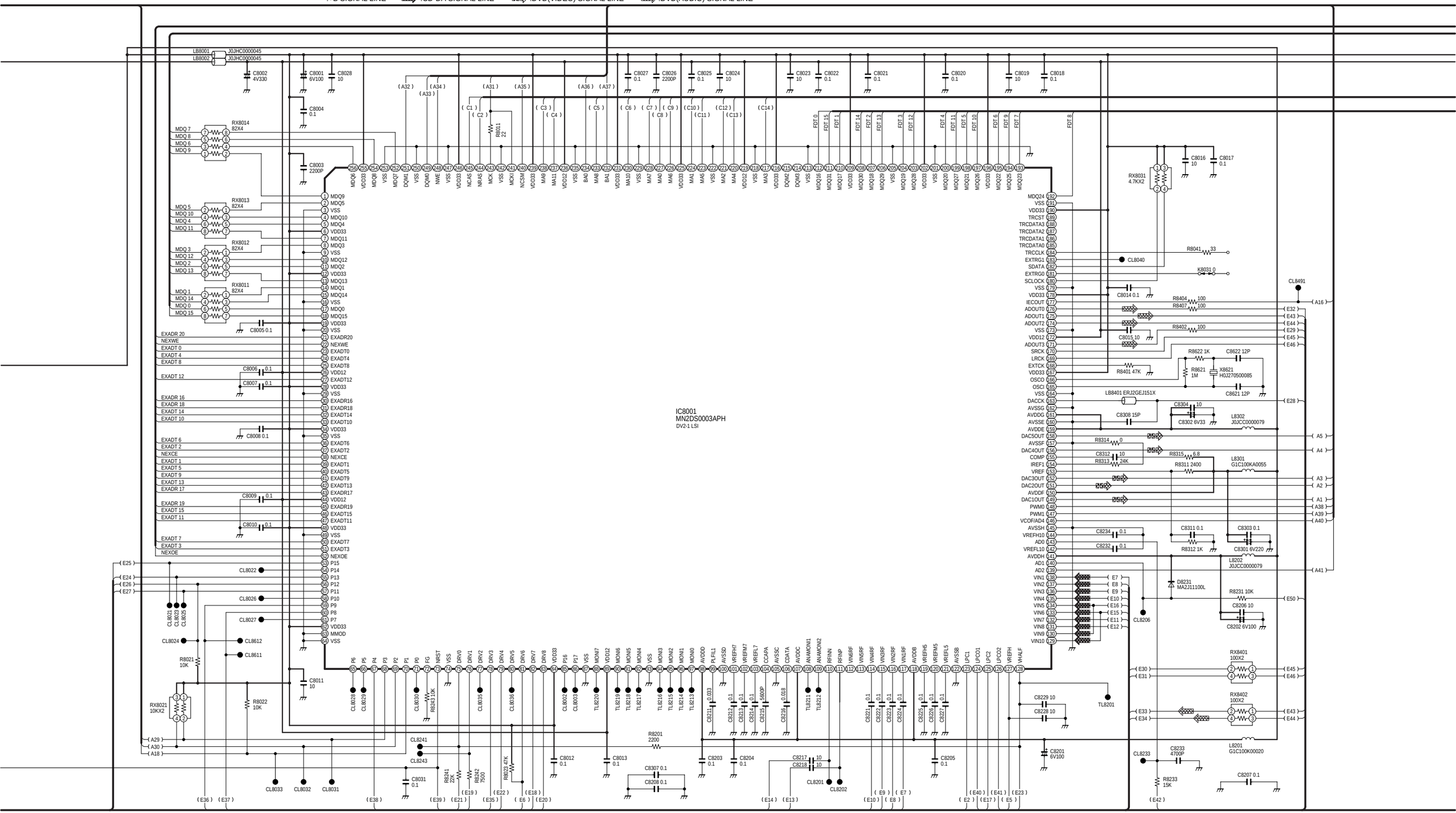

SCHEMATIC DIAGRAM-3

A DVD MODULE CIRCUIT

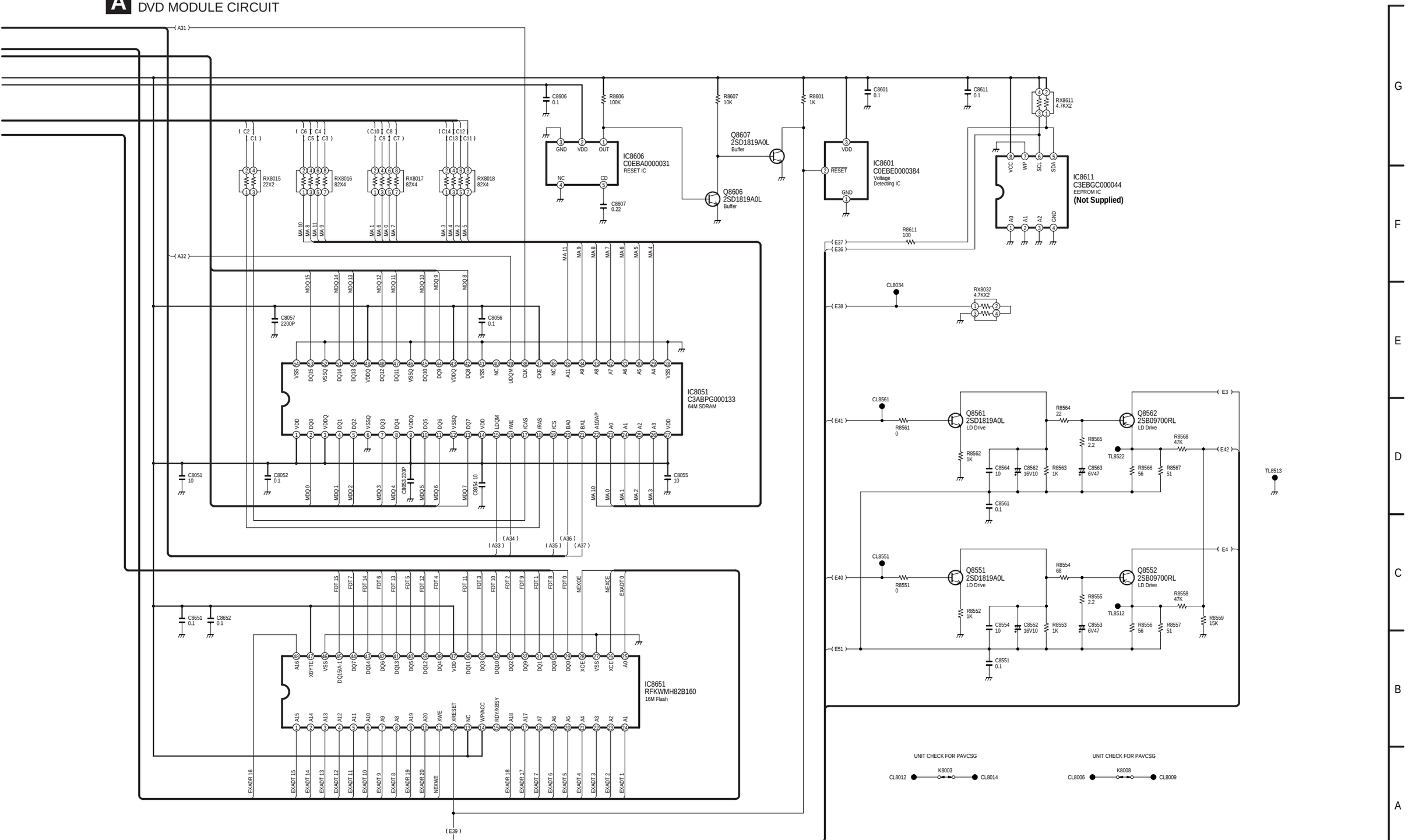

SCHEMATIC DIAGRAM-4

B MAIN CIRCUIT

—— :+B SIGNAL LINE – – – :-B SIGNAL LINE :MAIN SIGNAL LINE :DVD(VIDEO) SIGNAL LINE :FM/AM SIGNAL LINE

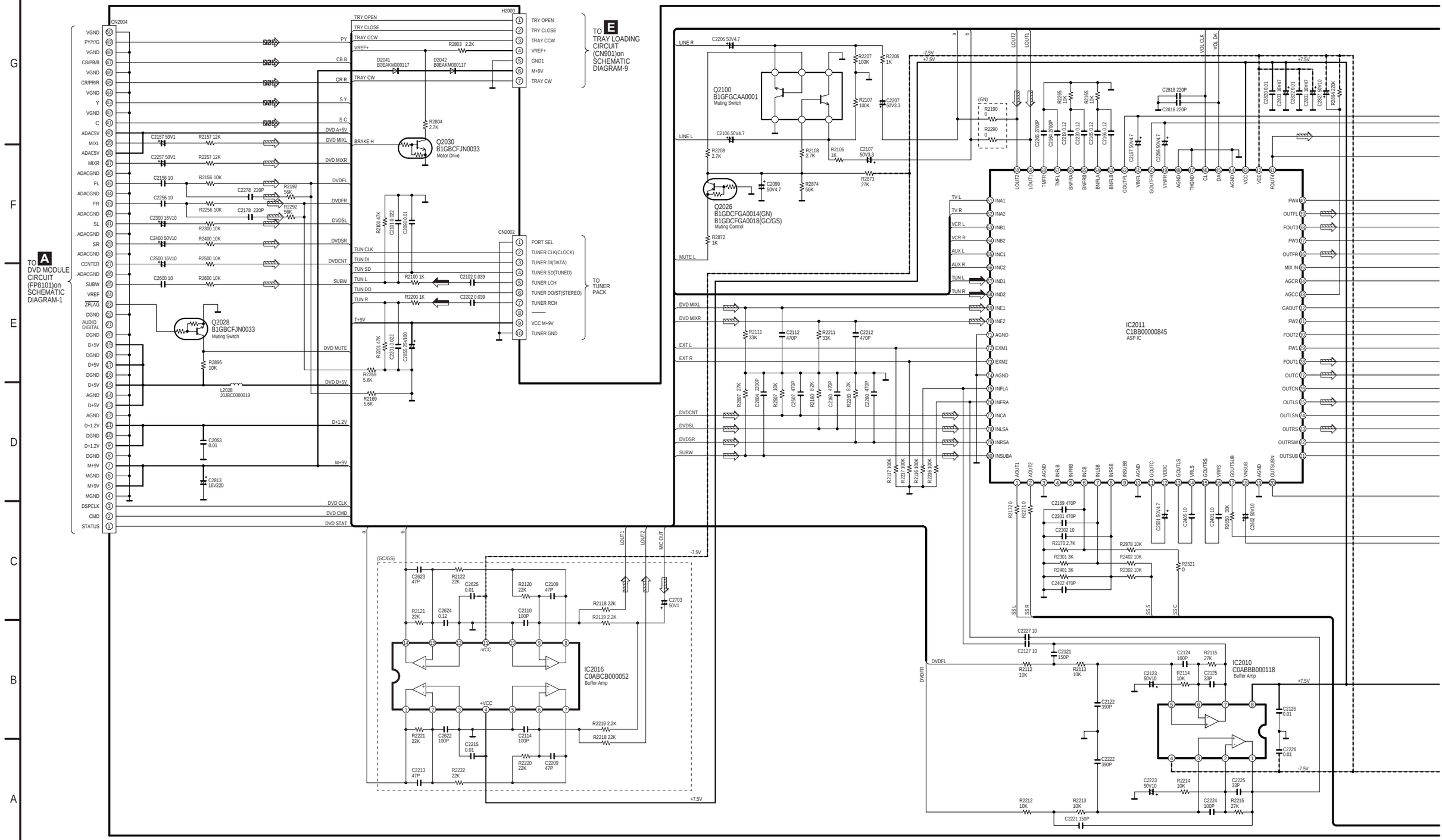

SCHEMATIC DIAGRAM-5

B MAIN CIRCUIT

—— :+B SIGNAL LINE - - - :-B SIGNAL LINE ⇨ :MAIN SIGNAL LINE

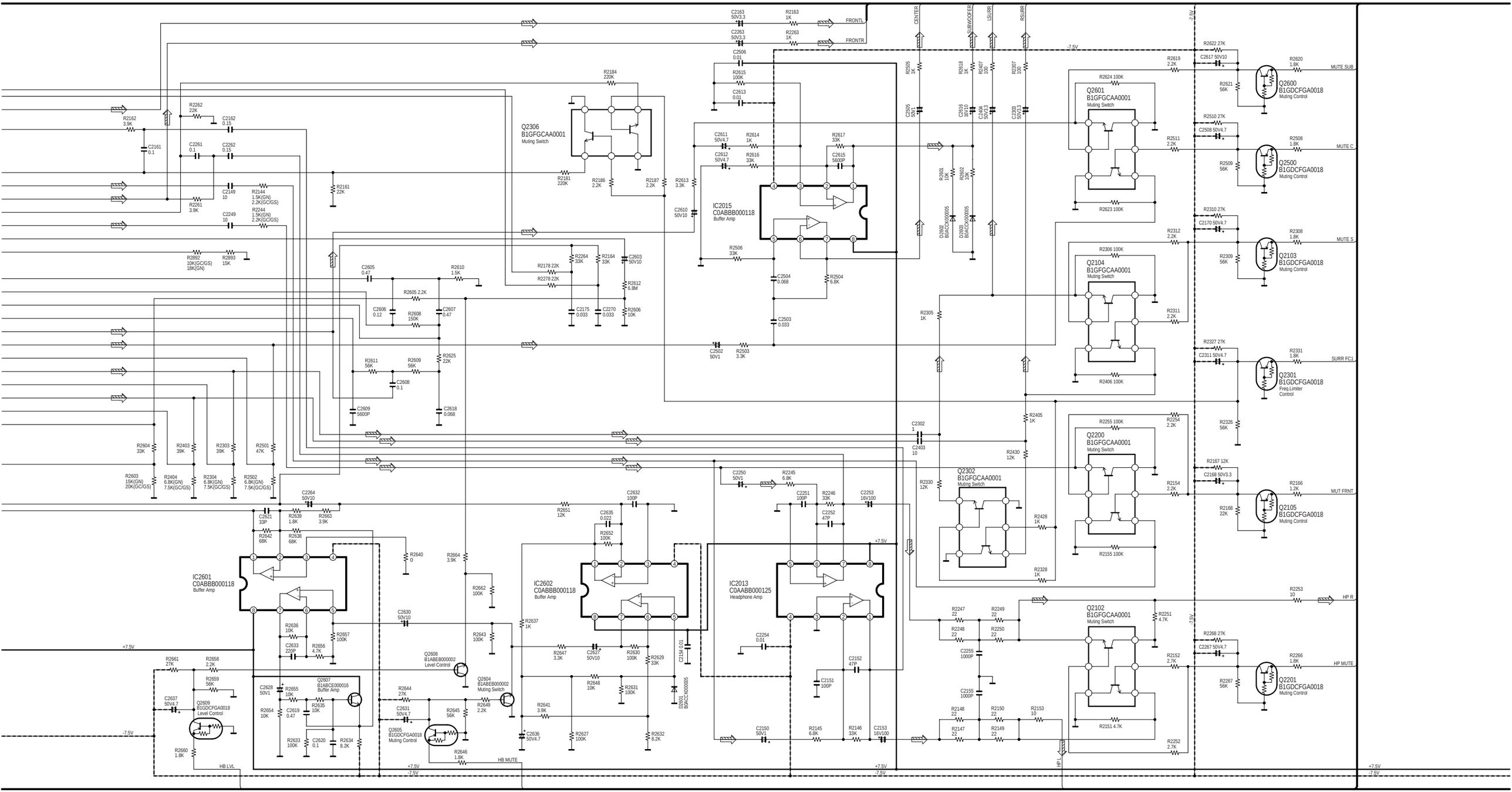

SA-HT840GC/GS/GN MAIN CIRCUIT

B MAIN CIRCUIT

:+B SIGNAL LINE :-B SIGNAL LINE :MAIN SIGNAL LINE :DVD(VIDEO) SIGNAL LINE

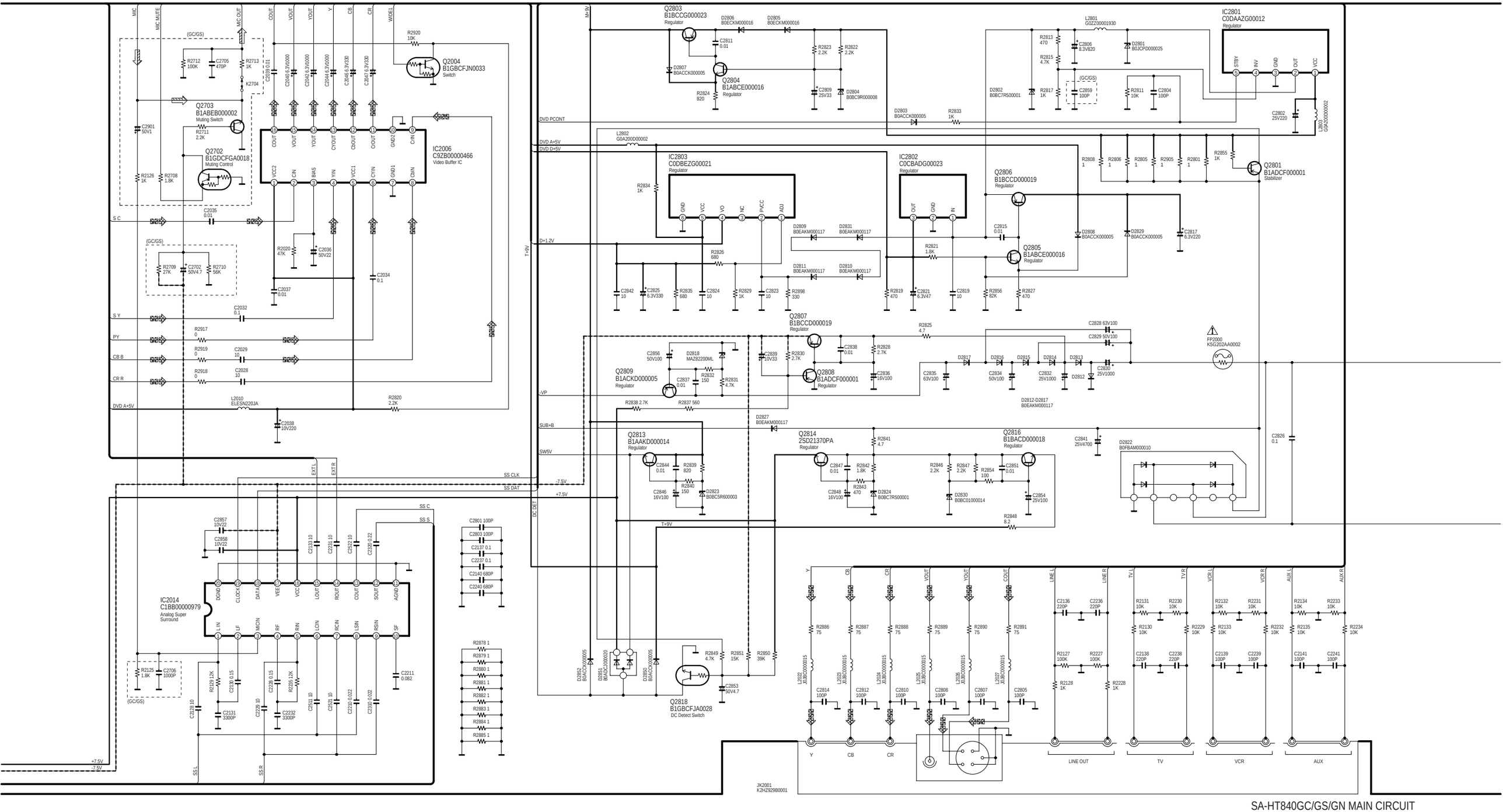

SA-HT840GC/GS/GN MAIN CIRCUIT

SCHEMATIC DIAGRAM-7

B MAIN CIRCUIT

—— :+B SIGNAL LINE ⇨ :MAIN SIGNAL LINE

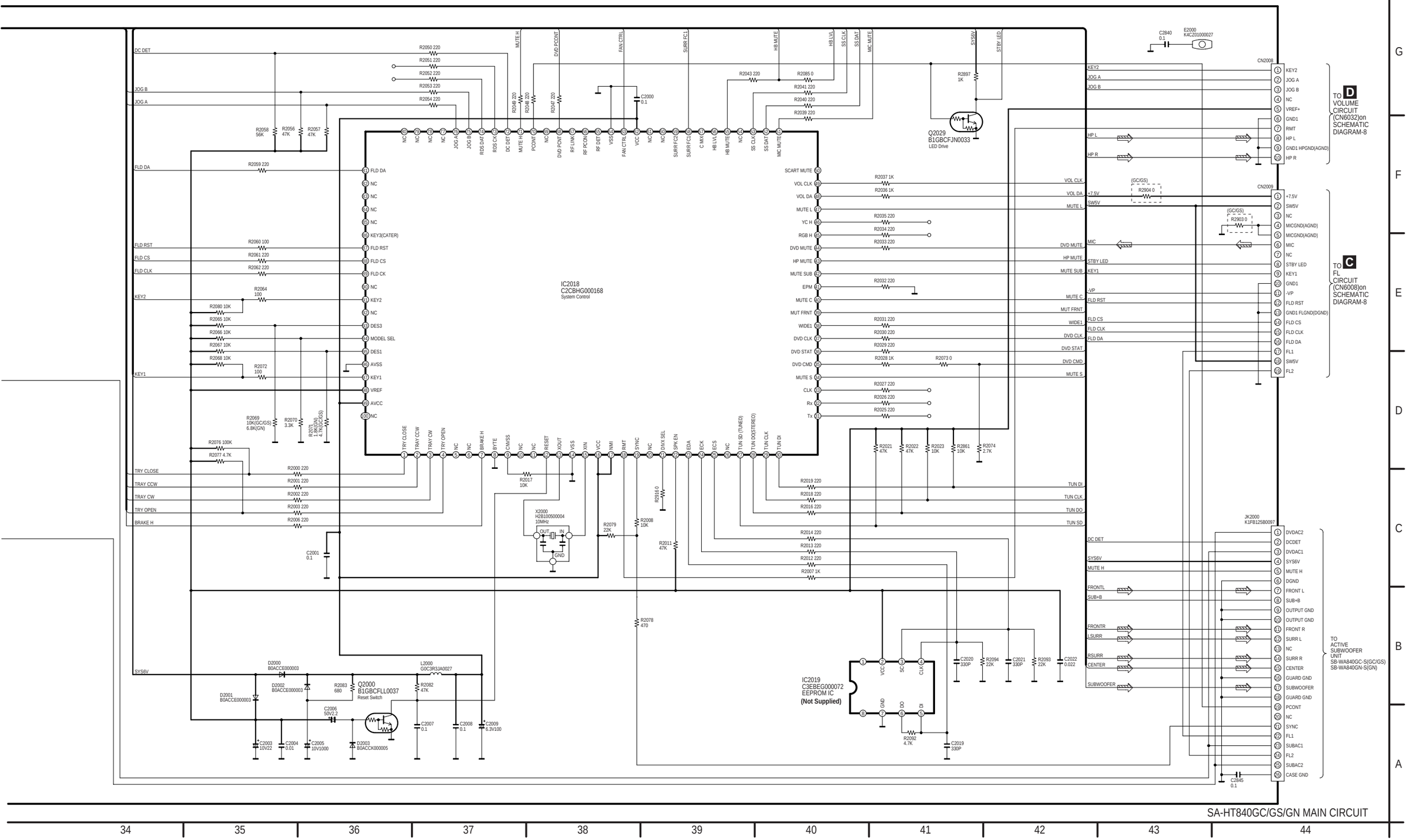

C FL CIRCUIT

—— :+B SIGNAL LINE ⇨ :MAIN SIGNAL LINE

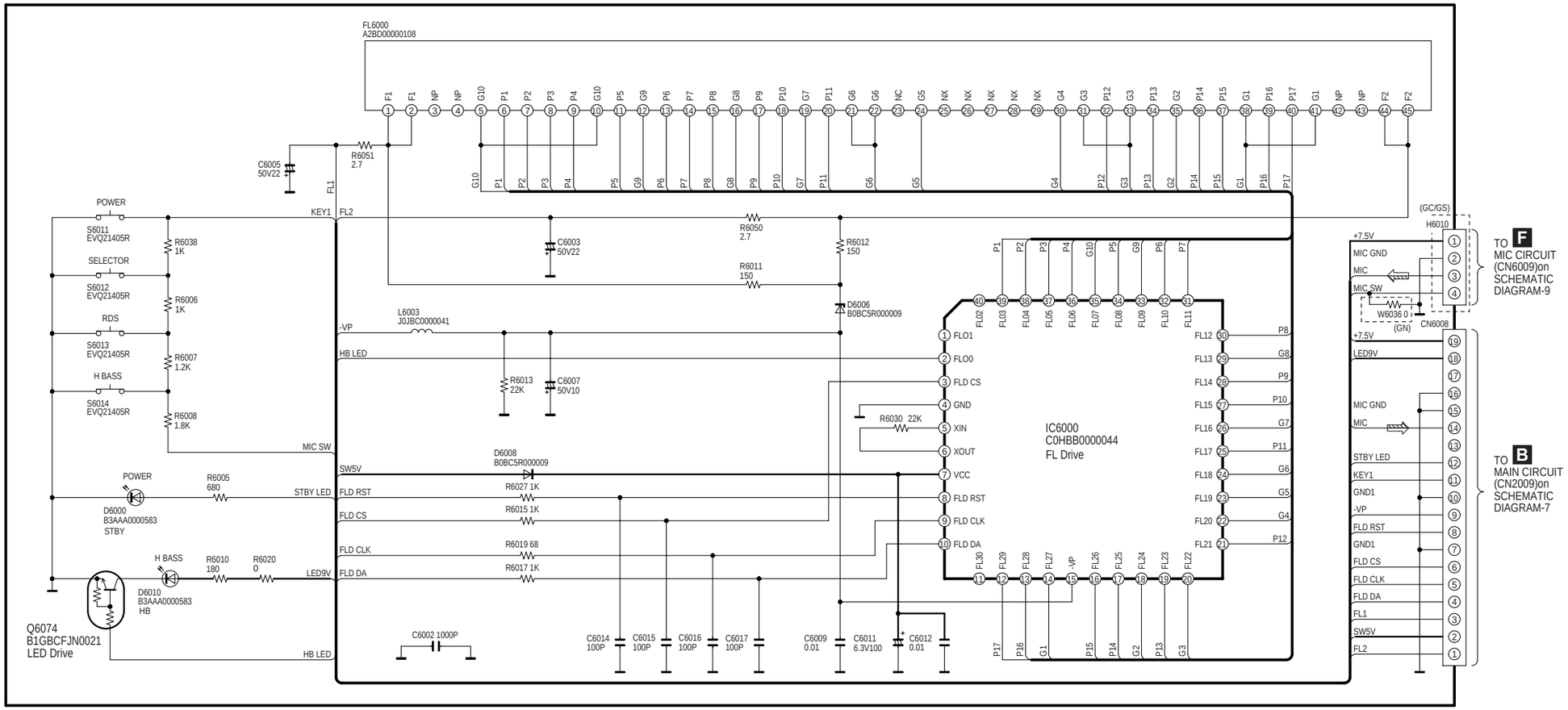

D VOLUME CIRCUIT

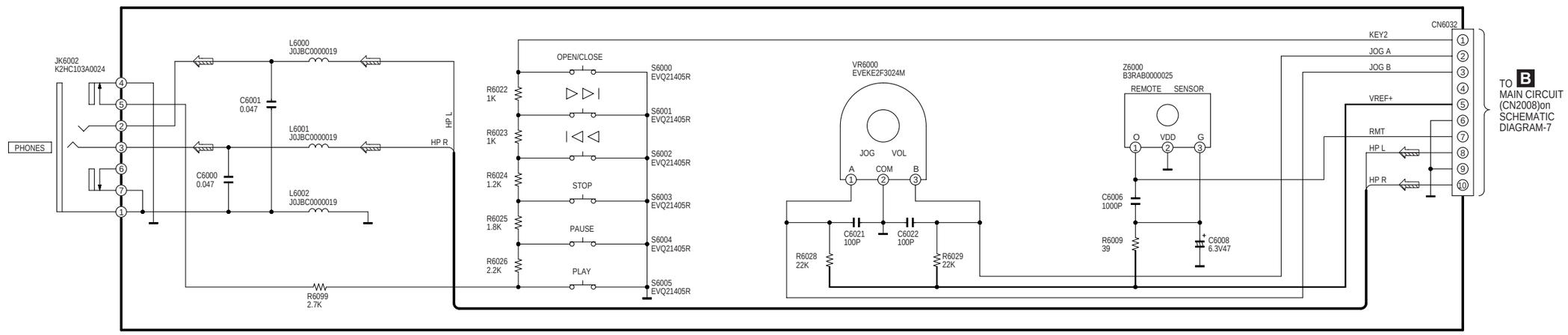

SA-HT840GC/GS/GN FL/VOLUME CIRCUIT

E TRAY LOADING CIRCUIT

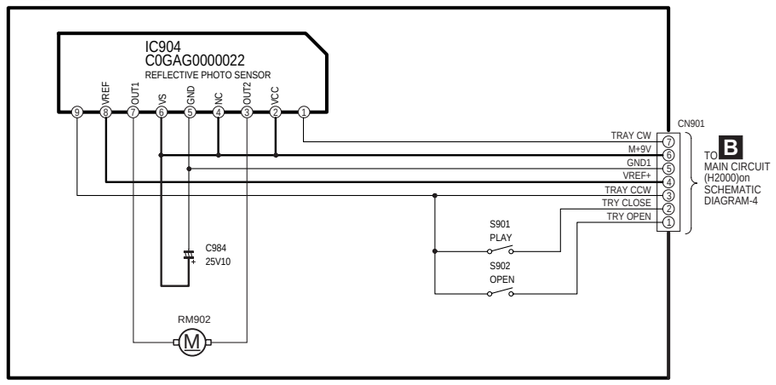

F MIC CIRCUIT(GC/GS ONLY)

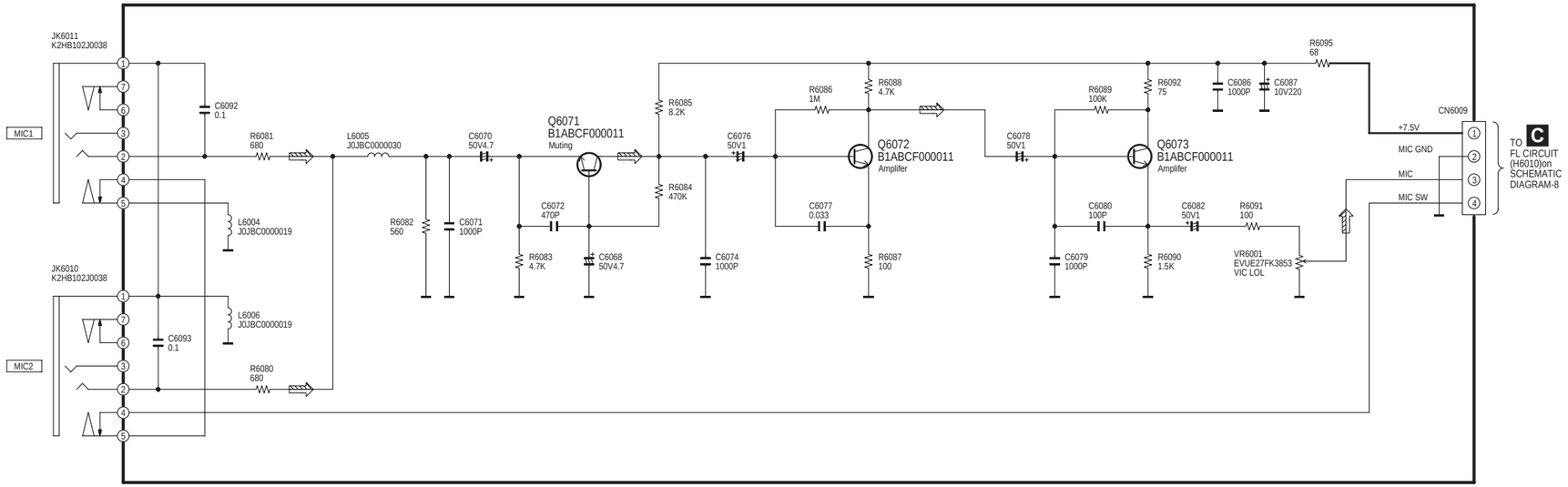

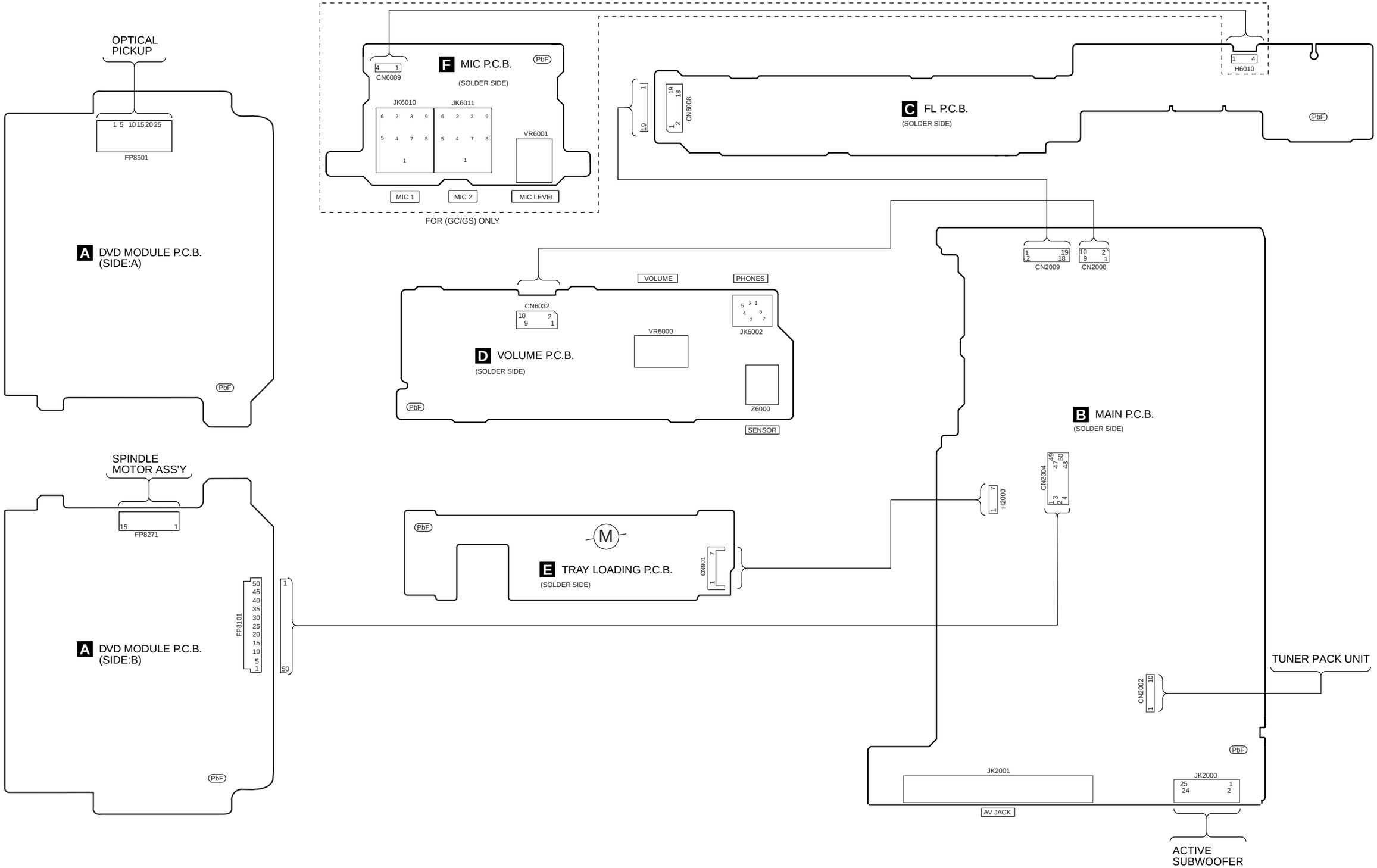

SA-HT840GC/GS/GN WIRING CONNECTION

■ Discs that can be played

Disc	Logo	Indication in these operating instructions	Remarks
DVD-RAM	DVD RAM RAM4.7	RAM	Recorded with devices using Version 1.1 of the Video Recording Format (a unified video recording standard), such as DVD video recorders, DVD video cameras, personal computers, etc.
		JPEG	Recorded using the DCF (Design rule for Camera File system) standard Version 1.0. ● To play JPEG files, select “Play as Data Disc” in Other Menu.
DVD-Audio	DVD AUDIO	DVD-A	—
		DVD-V	Some DVD-Audio discs contain DVD-Video content. To play DVD-Video content, select “Play as DVD-Video” in Other Menu.
DVD-Video	DVD VIDEO DVD VIDEO	DVD-V	—
DVD-R (DVD-Video)/ DVD-RW (DVD-Video)	DVD R R4.7 DVD R W		Discs recorded and finalized※ on DVD video recorders or DVD video cameras.
+ R (Video)/ + RW (Video)	—		Discs recorded and finalized※ on DVD video recorders or DVD video cameras.
Video CD	COMPACT disc DIGITAL VIDEO	VCD	—
SVCD	COMPACT disc SUPER VIDEO		Conforming to IEC62107
CD	COMPACT disc DIGITAL AUDIO COMPACT disc DIGITAL AUDIO TEXT	CD	This unit is compatible with HDCD, but does not support the Peak Extend function (a function which expands the dynamic range of high level signals). HDCD-encoded CD’s sound better because they are encoded with 20 bits, as compared with 16 bits for all other CD’s.
CD-R CD-RW	—	WMA MP3 JPEG CD VCD	● This unit can play CD-R/RW (audio recording disc) recorded with the formats on the left. Close the sessions or finalize※ the disc after recording. ● **HighMAT discs** WMA, MP3 or JPEG files only. To play without using the HighMAT function, select “Play as Data Disc” in Other Menu. ● WMA This unit does not support Multiple Bit Rate (MBR: a file that contains the same content encoded at several different bit rates).

※ A process that allows play on compatible equipment.
● It may not be possible to play the above discs in all cases due to the type of disc or condition of the recording.

■ Discs that cannot be played

DVD-ROM, CD-ROM, CDV, CD-G, SACD, DivX Video Discs and Photo CD, DVD-RAM that cannot be removed from their cartridge, 2.6-GB and 5.2-GB DVD-RAM and “Chaoji VCD” available on the market including CVD, DVCD and SVCD that do not conform to IEC62107.

■ Audio format of DVD’ s

This unit automatically recognizes and decodes discs with these symbols.

DOLBY DIGITAL

DIGITAL dts SURROUND

■ Video systems

– This unit can play PAL and NTSC, but your television must match the system used on the disc.
– PAL discs cannot be correctly viewed on an NTSC television.
– This unit can convert NTSC signals to PAL 60 for viewing on a PAL television.

■ To clean discs

Wipe with a damp cloth and then wipe dry.

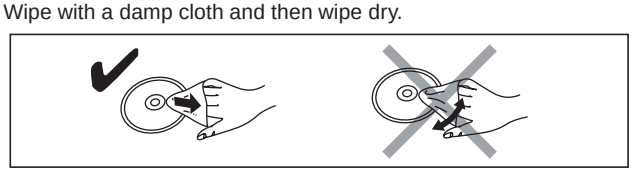

■ Disc handling precautions

● Do not attach labels or stickers to discs (This may cause disc warping, rendering it unusable).
● Do not write on the label side with a ball-point pen or other writing instrument.
● Do not use record cleaning sprays, benzine, thinner, static electricity prevention liquids or any other solvent.
● Do not use scratch-proof protectors or covers.
● Do not use the following discs:
– Discs with exposed adhesive from removed stickers or labels (rented discs, etc.).
– Discs that are badly warped or cracked.
– Irregularly shaped discs, such as heart shapes.

WF No. IC2006-2 (PLAY)

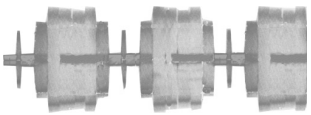

0.6Vp-p(20usec/div)

WF No. IC2006-4 (PLAY)

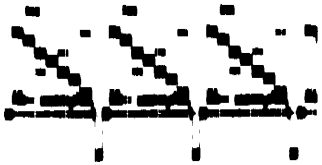

1.1Vp-p(20usec/div)

WF No. IC2006-6 (PLAY)

1.1Vp-p(20usec/div)

WF No. IC2006-8 (PLAY)

0.5Vp-p(20usec/div)

WF No. IC2006-9 (PLAY)

0.5Vp-p(20usec/div)

WF No. IC2006-11 (PLAY)

1.0Vp-p(20usec/div)

WF No. IC2006-12 (PLAY)

1.0Vp-p(20usec/div)

WF No. IC2006-13 (PLAY)

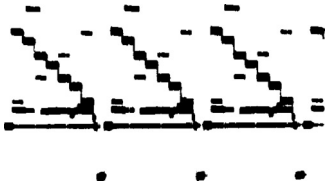

2.1Vp-p(20usec/div)

WF No. IC2006-14 (PLAY)

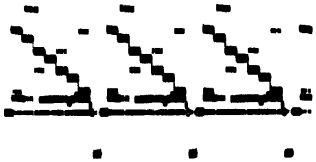

2.1Vp-p(20usec/div)

WF No. IC2006-15 (PLAY)

2.1Vp-p(20usec/div)

WF No. IC2006-16 (PLAY)

1.2Vp-p(20usec/div)

WF No. IC2011-36 (PLAY)

40mVp-p(200usec/div)

WF No. IC2013-7 (PLAY)

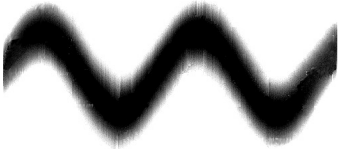

80mVp-p(200usec/div)

WF No. IC2018-13 (PLAY)

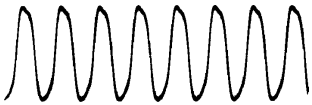

3.8Vp-p(100nsec/div)

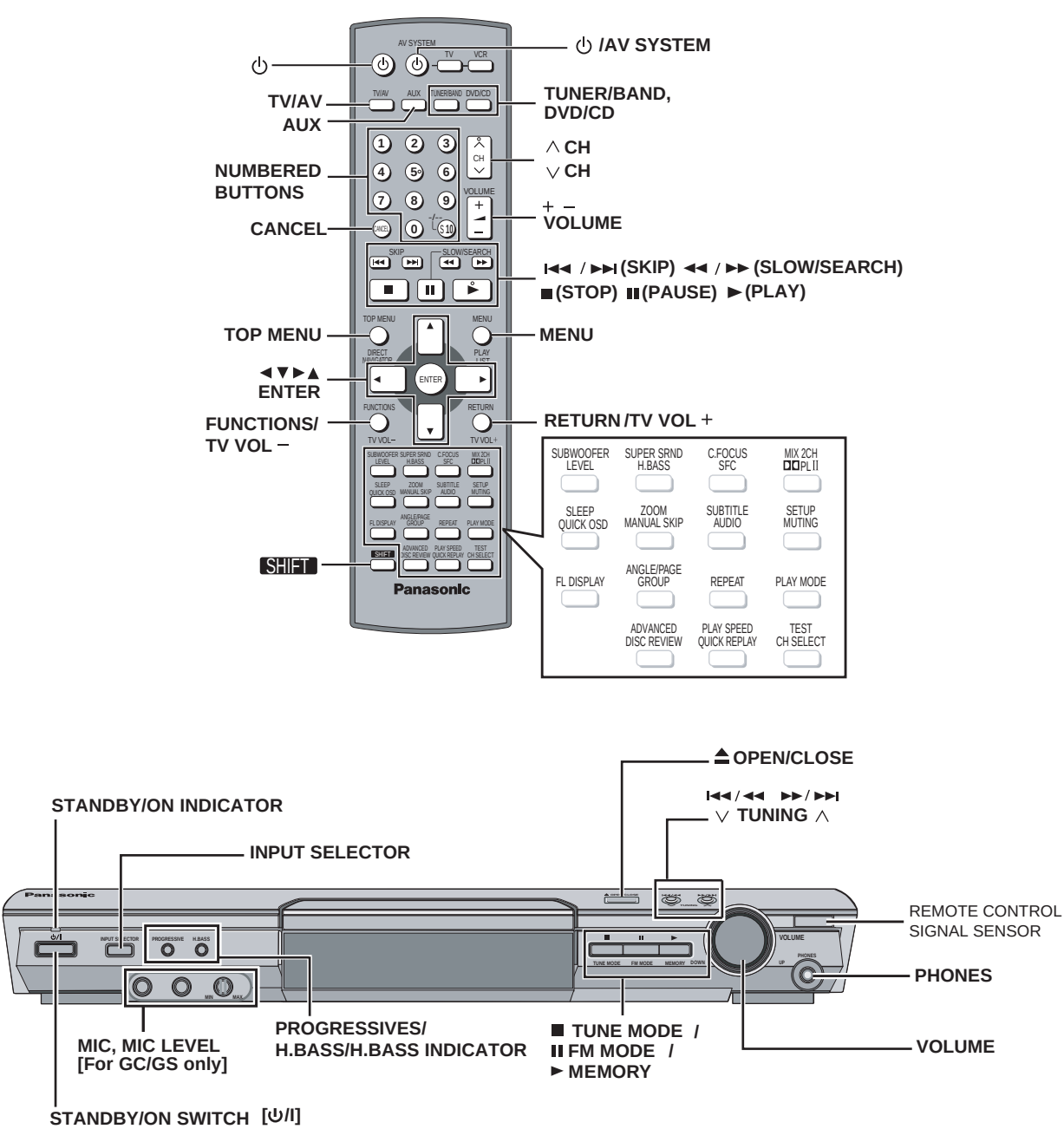
⏻ /AV SYSTEM
⏻
TV/AV
AUX
TUNER/BAND, DVD/CD
∧ CH
∨ CH
NUMBERED BUTTONS
CANCEL
+ –
VOLUME
⏮ / ⏭ (SKIP) ◀◀ / ▶▶ (SLOW/SEARCH)
■ (STOP) ❚❚ (PAUSE) ▶ (PLAY)
TOP MENU
MENU
◀ ▼ ▶ ▲
ENTER
FUNCTIONS/ TV VOL –
RETURN /TV VOL +
SHIFT
Panasonic
SUBWOOFER LEVEL
SUPER SRND H.BASS
C.FOCUS SFC
MIX 2CH PL II
SLEEP QUICK OSD
ZOOM MANUAL SKIP
SUBTITLE AUDIO
SETUP MUTING
FL DISPLAY
ANGLE/PAGE GROUP
REPEAT
PLAY MODE
ADVANCED DISC REVIEW
PLAY SPEED QUICK REPLAY
TEST CH SELECT
⏏ OPEN/CLOSE
⏮ / ◀◀ ▶▶ / ⏭
∨ TUNING ∧
STANDBY/ON INDICATOR
INPUT SELECTOR
REMOTE CONTROL SIGNAL SENSOR
PHONES
MIC, MIC LEVEL [For GC/GS only]
PROGRESSIVES/ H.BASS/H.BASS INDICATOR
■ TUNE MODE / ❚❚ FM MODE / ▶ MEMORY
VOLUME
STANDBY/ON SWITCH [⏻/I]

C0ABBB000118 (8p)
C0FBBK000050 (16p)
C0CBCBD00018 (8p)

B1ABCE000016 (8p)
C1BB00000979 (20p)
C0ABCB000052(14p)
C3ABPG000133(54p)
C3EBEG000072 (8p)
C3EBGC000044 (8p)
C9ZB00000466 (16p)

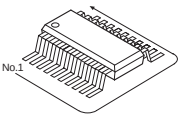

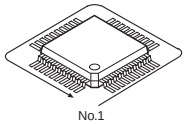

C0HBB0000044 (40p)
C2CBHG000168(100p)
C1BB00000845 (80p)
MN2DS0003APH (256p)

RFKWMH82C160

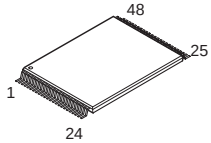

C0AABB000125

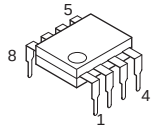

C0GBG0000048

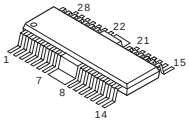

C0EBA0000031
C0JBAA000346

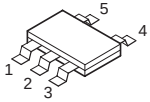

C0DBEZG00021

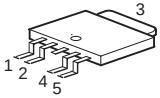

C0EBE0000384

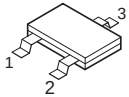

C0CBADG00023

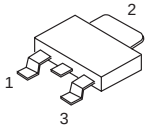

C0GAG0000022

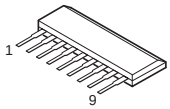

2SD21370PA

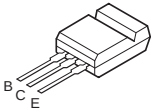

C0DAAZG00012

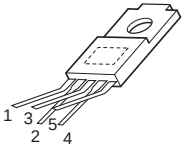

B1BCCG000023

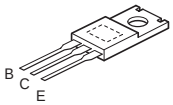

B1BCCD000019
B1BACD000018

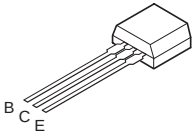

B1ACKD000005

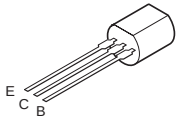

B1AAKD000014

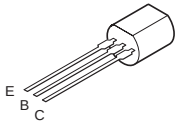

B0ADCJ000020

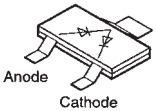

B1GFGCAA0001

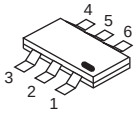

2SB09700RL
2SB1219AHL
2SD1819A0L
B1ABEB000002
B1ADCF000001
B1GDCFGA0014
B1GDCFGA0018
B1GBCFLL0037

B1GBCFJN0033
B1GBCFJA0028
B1ABCF000011
UNR511V00L
UNR521100L
UNR521400L

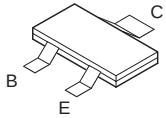

MAZ82200ML

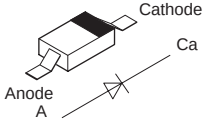

B0ACCE000003
B0ACCK000005
B0ECKM000016

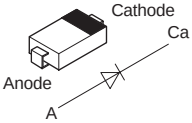

B0BC01000014
B0BC9R000008
B0BC7R500001
B0BC5R600003
B0BC5R000009
B0JCPD000025

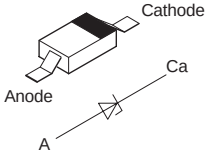

MA2J11100L

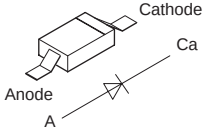

MA2J72800L

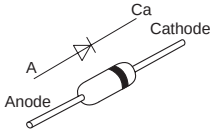

B0EAKM000117

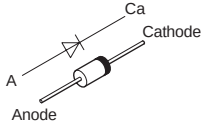

B3AAA0000583

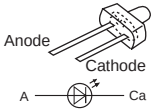

B0FBAM000010

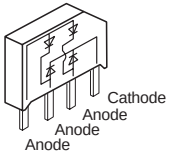

23 Schematic Diagram

SCHEMATIC DIAGRAM-1

A DVD MODULE CIRCUIT

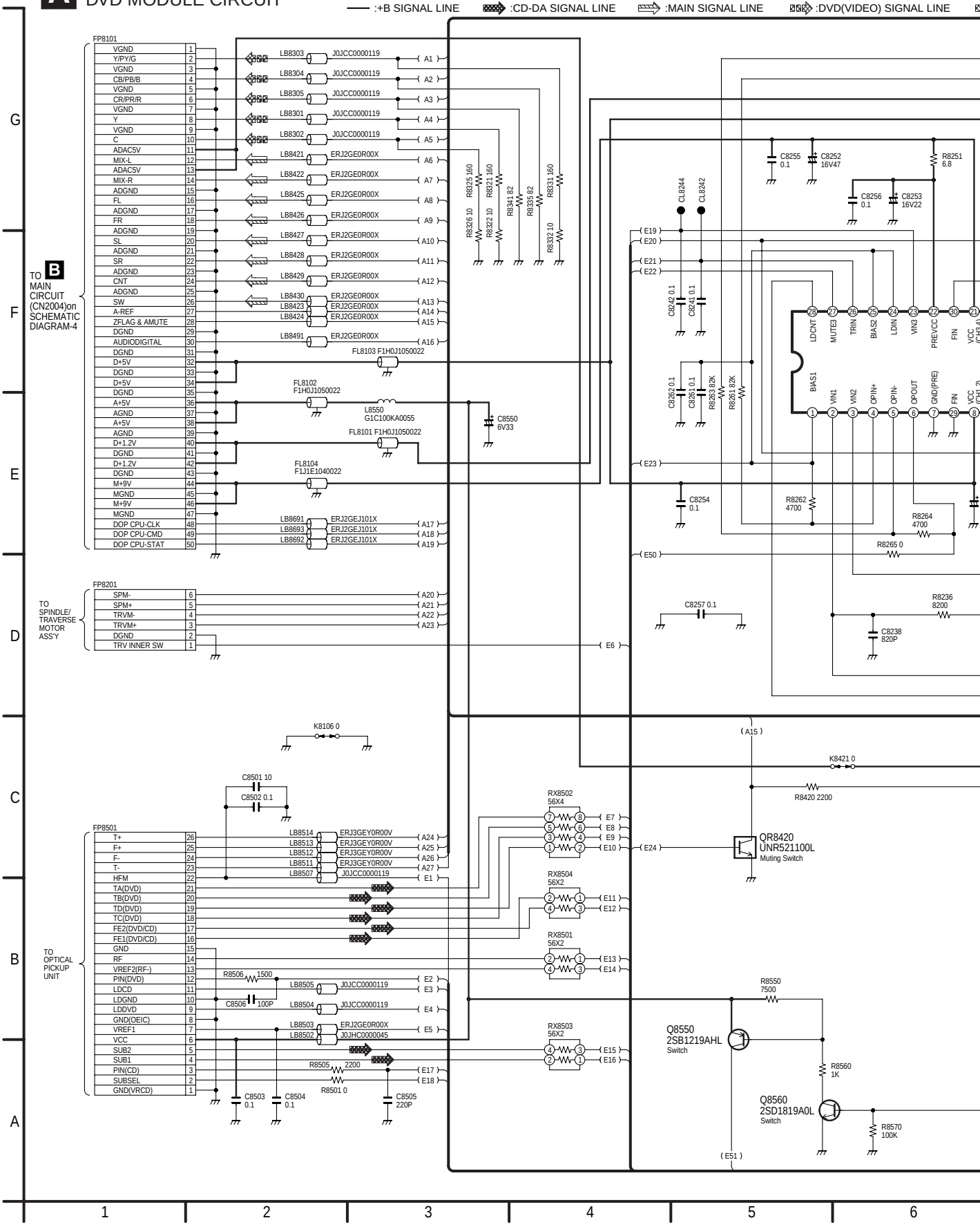

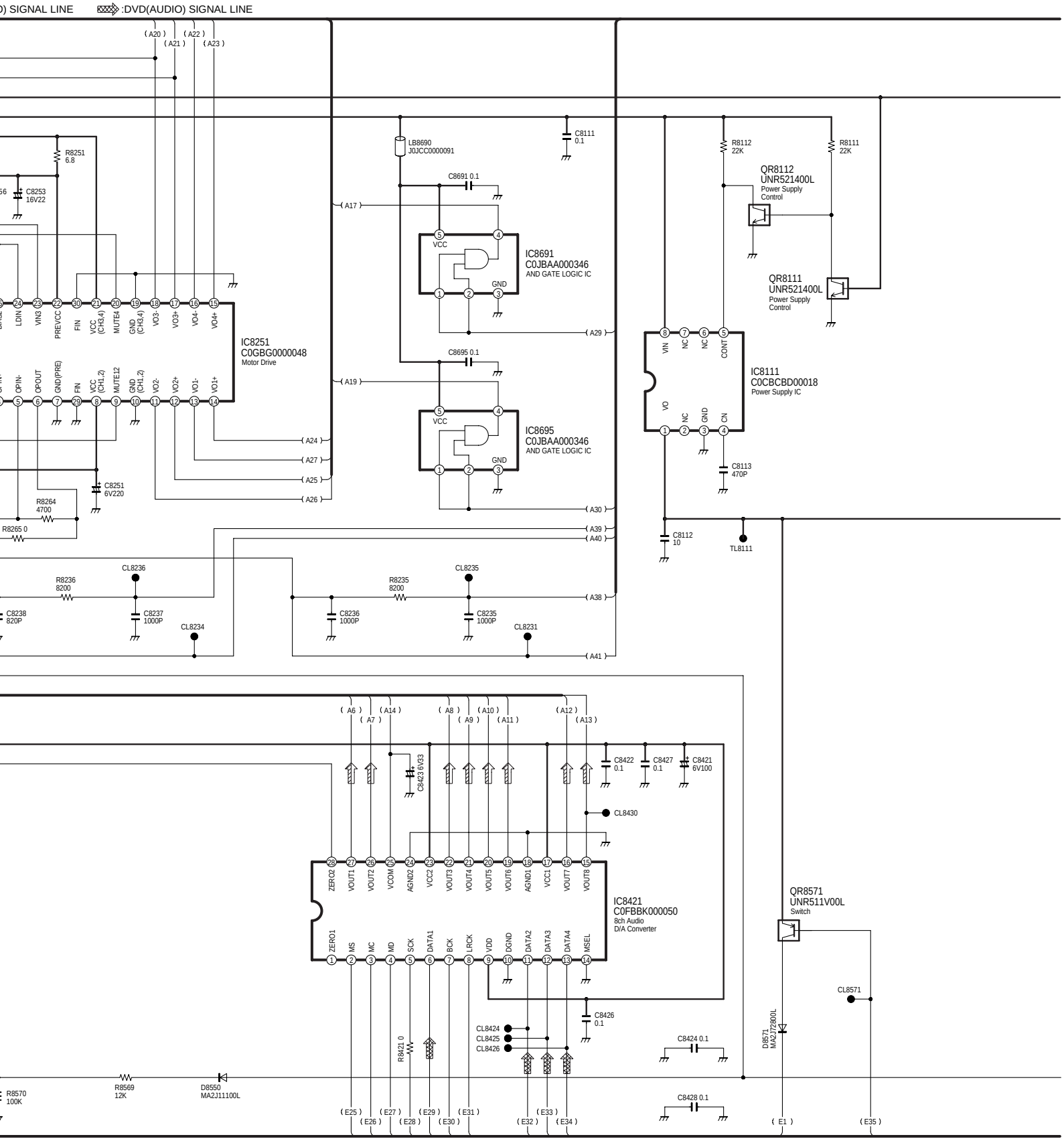

SA-HT840GC/GS/GN DVD MODULE CIRCUIT

SCHEMATIC DIAGRAM-2

A DVD MODULE CIRCUIT

—— :+B SIGNAL LINE :CD-DA SIGNAL LINE :DVD(VIDEO) SIGNAL LINE :DVD(AUDIO) SIGNAL LINE

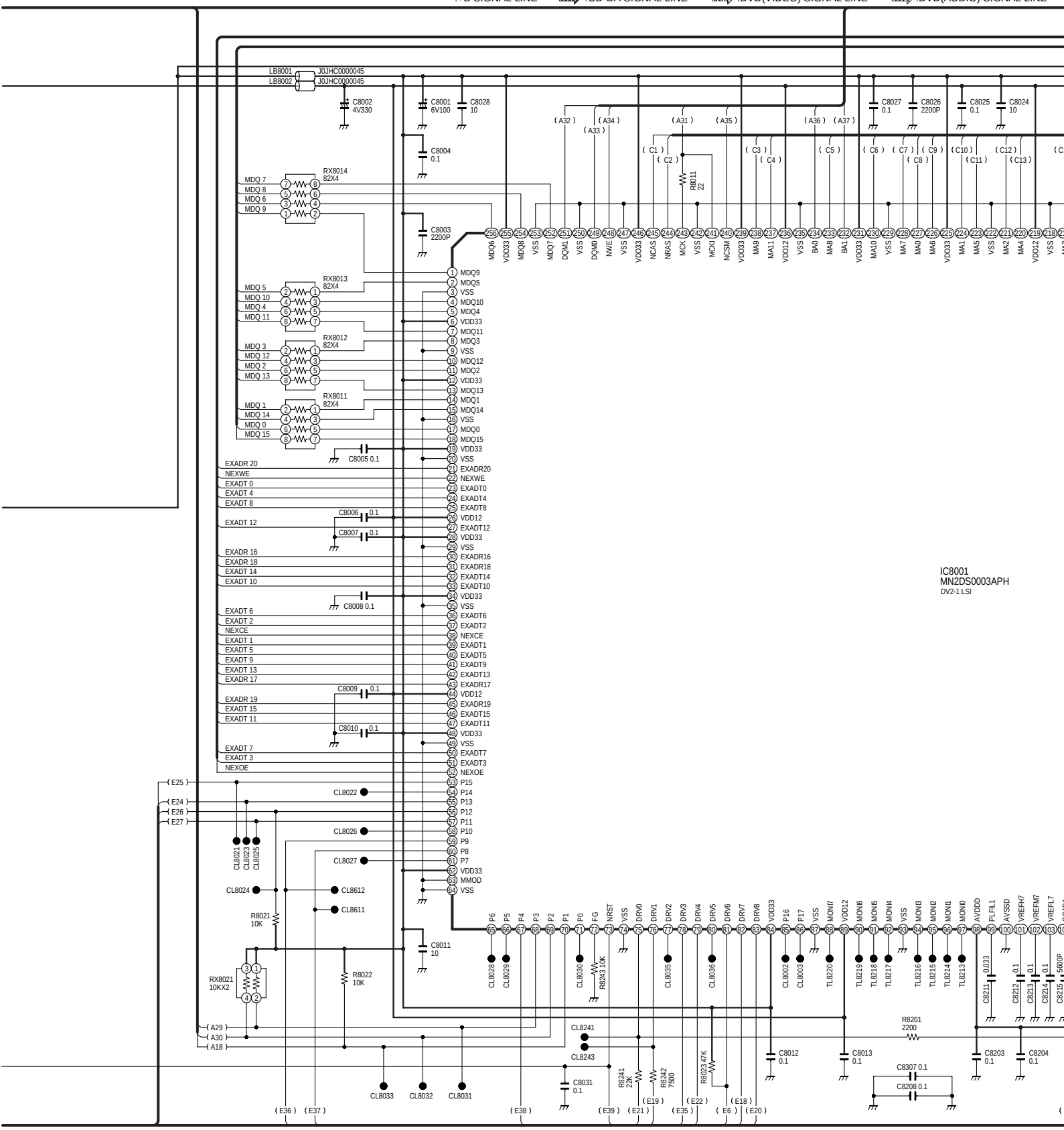

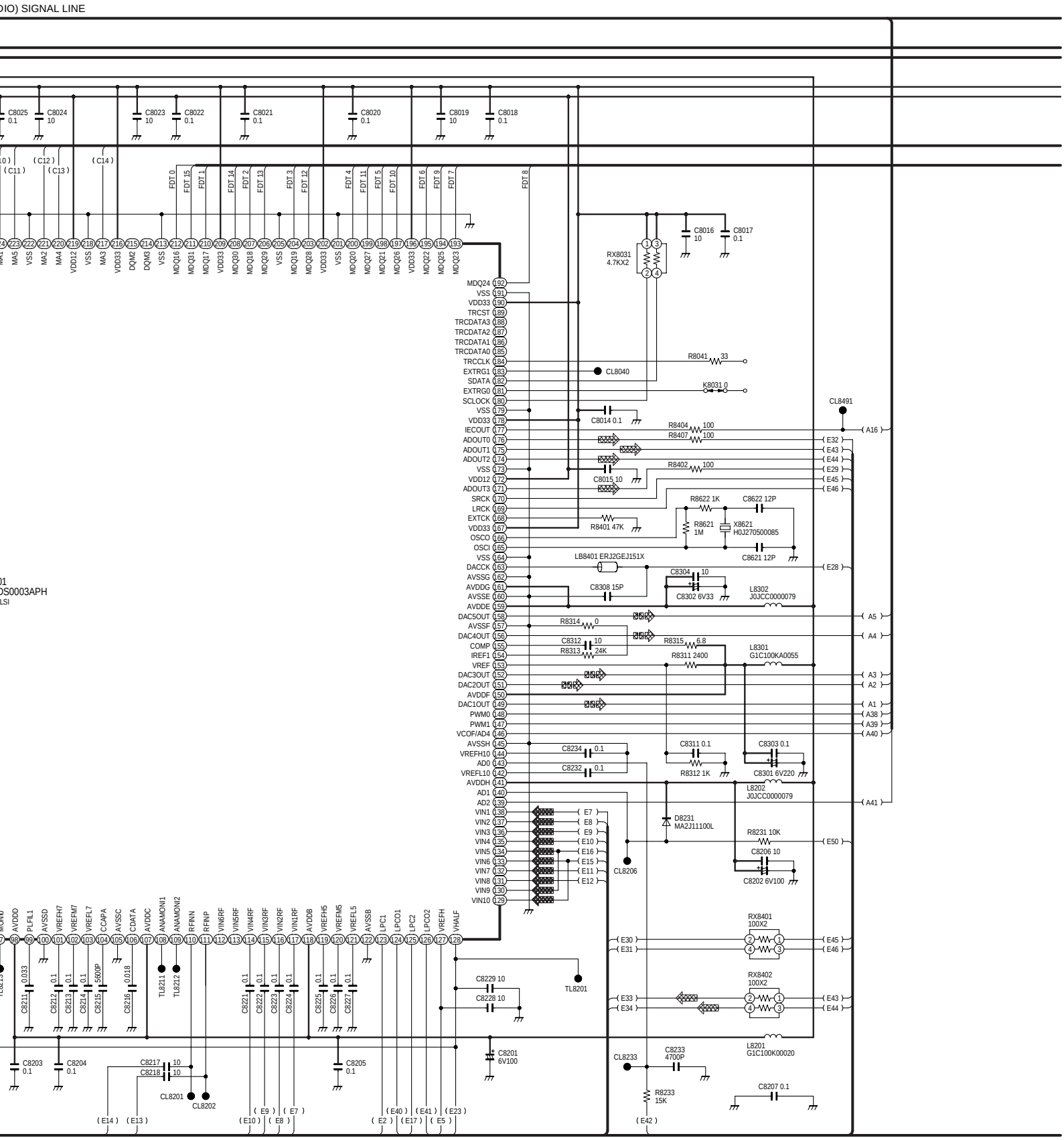
DIO) SIGNAL LINE
C8025 0.1
C8024 10
C8023 10
C8022 0.1
C8021 0.1
C8020 0.1
C8019 10
C8018 0.1
C8016 10
C8017 0.1
RX8031 4.7KX2
R8041 33
CL8040
K8031 0
CL8491
C8014 0.1
R8404 100
R8407 100
R8402 100
C8015 10
R8622 1K
C8622 12P
R8621 1M
X8621 H0J270500085
C8621 12P
R8401 47K
LB8401 ERJ2GEJ151X
C8304 10
C8308 15P
C8302 6V33
L8302 J0JCC0000079
R8314 0
C8312 10
R8313 24K
R8315 6.8
R8311 2400
L8301 G1C100KA0055
C8234 0.1
C8232 0.1
C8311 0.1
R8312 1K
C8303 0.1
C8301 6V220
L8202 J0JCC0000079
D8231 MA2J11100L
R8231 10K
C8206 10
C8202 6V100
CL8206
RX8401 100X2
RX8402 100X2
C8229 10
C8228 10
TL8201
C8201 6V100
L8201 G1C100K00020
CL8233
C8233 4700P
R8233 15K
C8207 0.1
C8203 0.1
C8204 0.1
C8217 10
C8218 10
C8205 0.1
CL8201
CL8202
SA-HT840GC/GS/GN DVD MODULE CIRCUIT
17
18
19
20
21
22

SCHEMATIC DIAGRAM-3

A DVD MODULE CIRCUIT

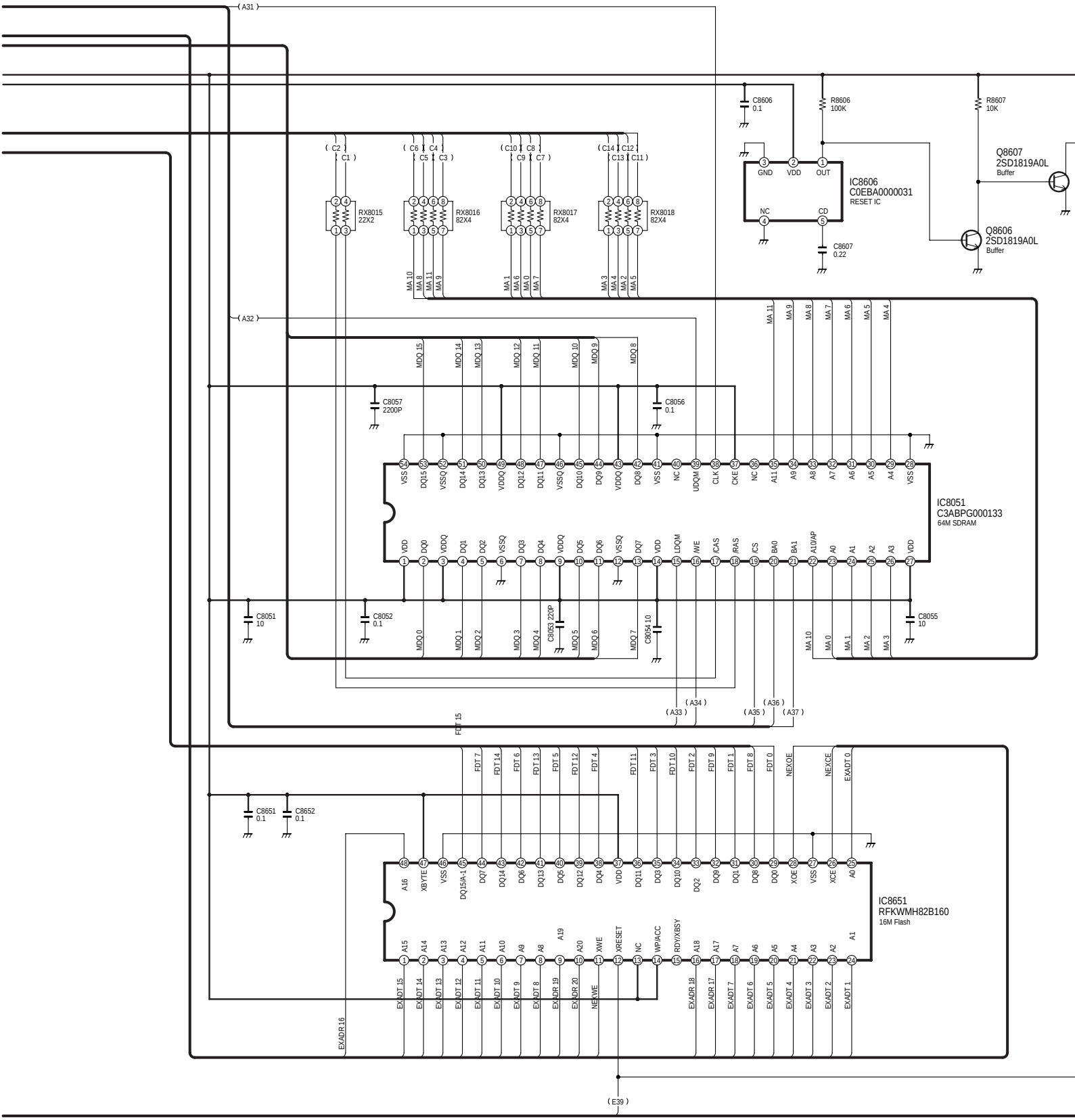

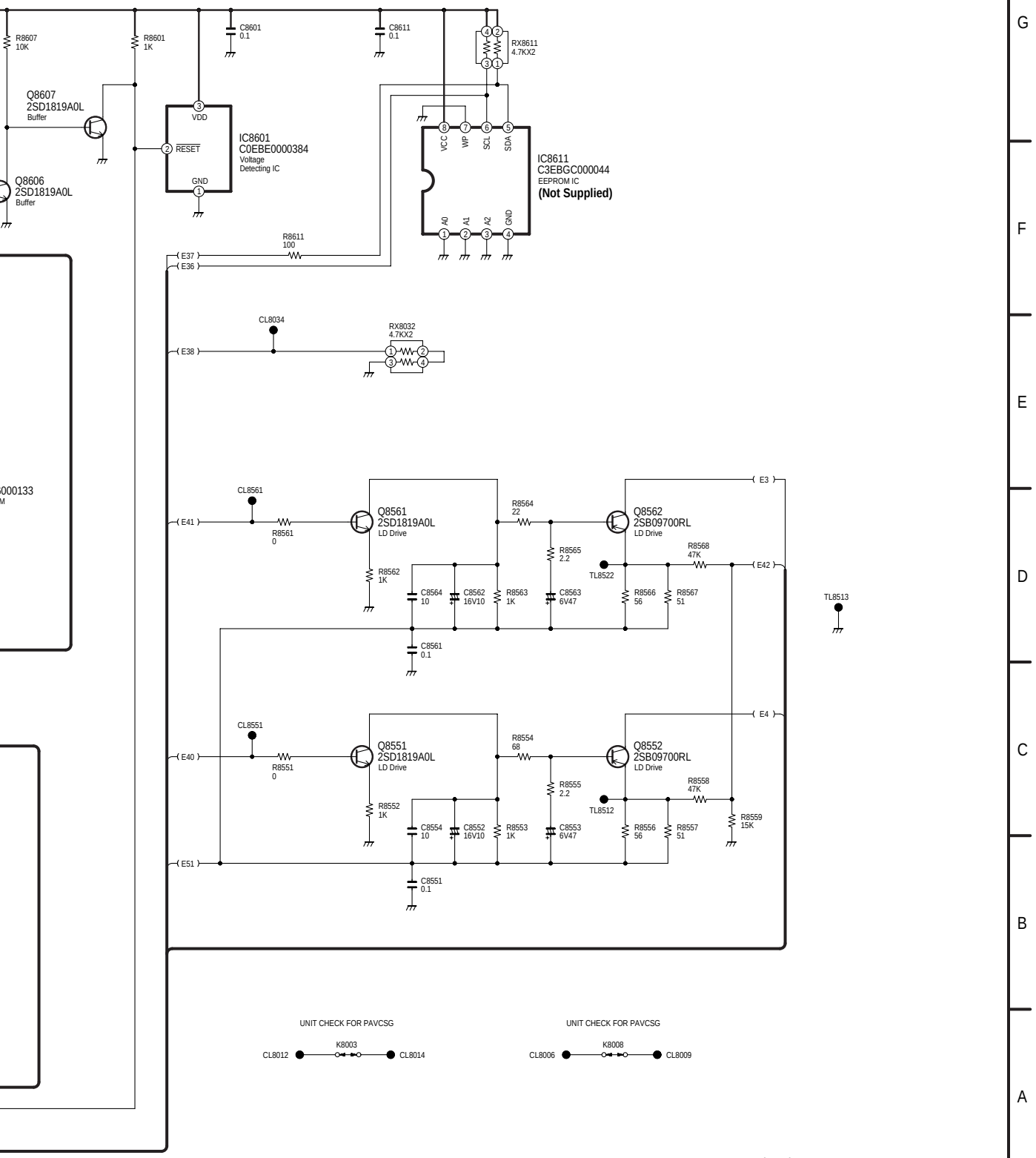

SA-HT840GC/GS/GN DVD MODULE CIRCUIT

SCHEMATIC DIAGRAM-4

B MAIN CIRCUIT

:+B SIGNAL LINE :-B SIGNAL LINE :MAIN SIGNAL LINE :DVD(VIDEO) SIGNAL LINE

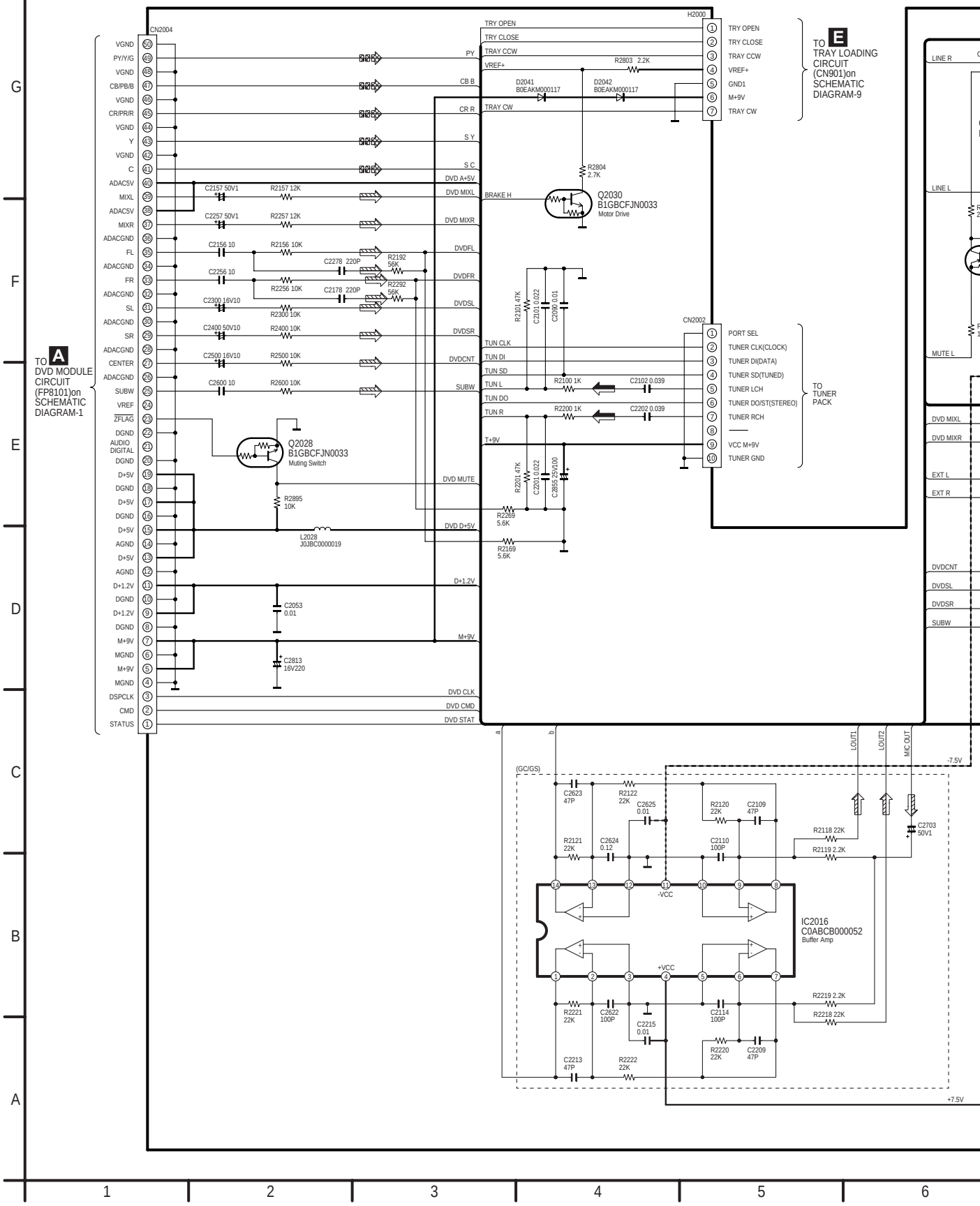

IGNAL LINE :FM/AM SIGNAL LINE

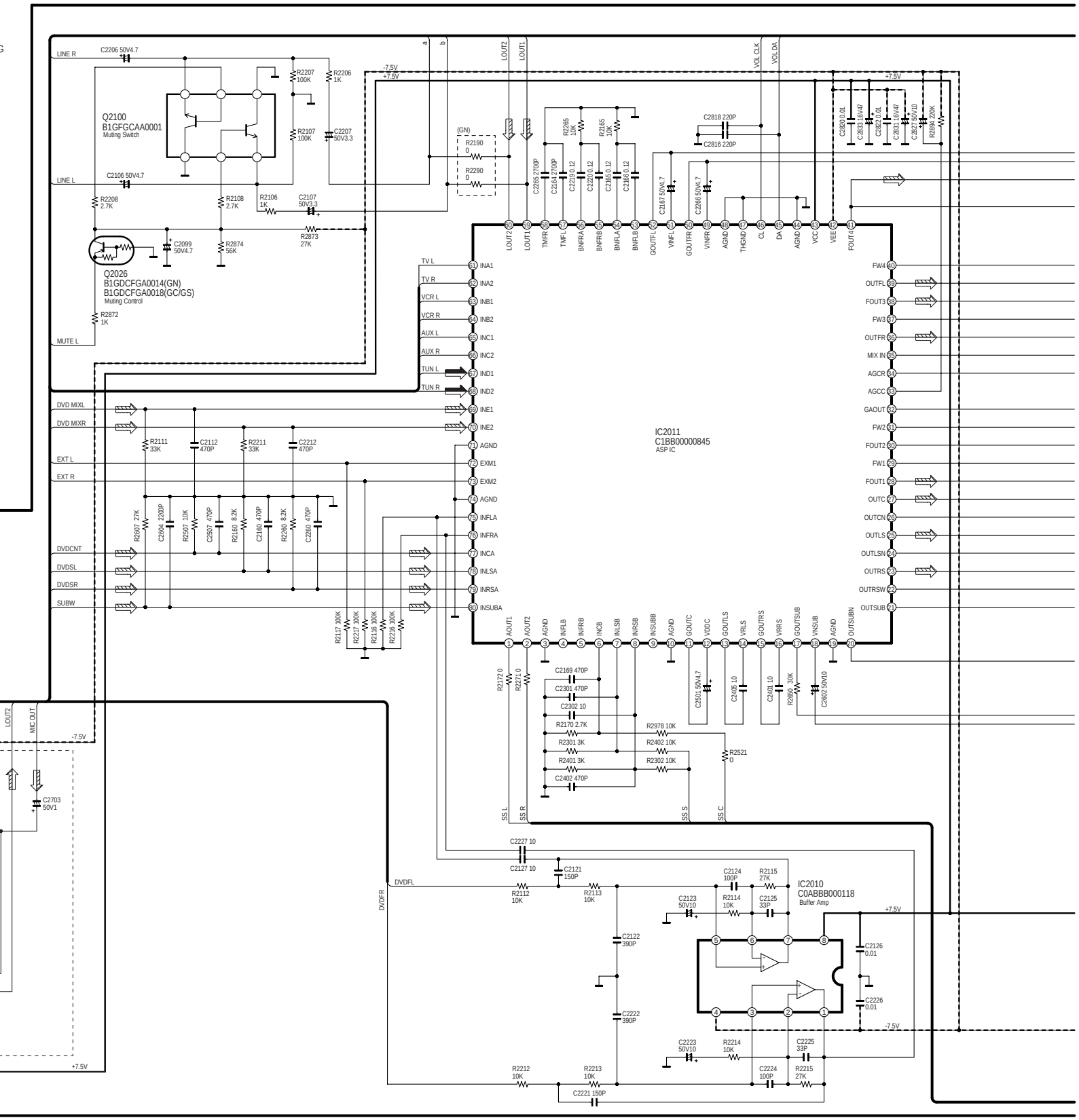

SA-HT840GC/GS/GN MAIN CIRCUIT

6 7 8 9 10 11

SCHEMATIC DIAGRAM-5

B MAIN CIRCUIT

—— :+B SIGNAL LINE - - - :-B SIGNAL LINE ⇨ :MAIN SIGNAL LINE

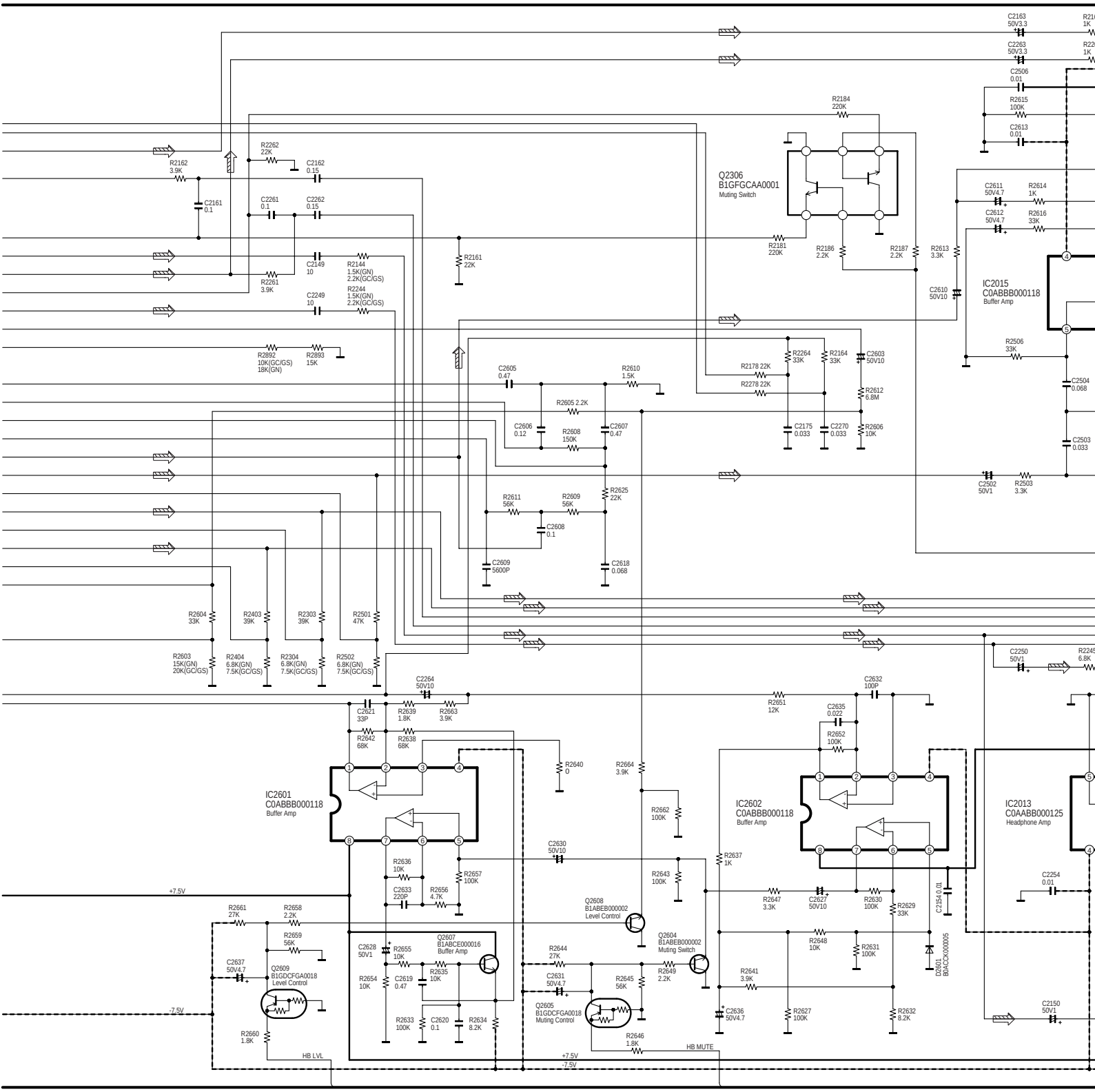

12 | 13 | 14 | 15 | 16 | 17

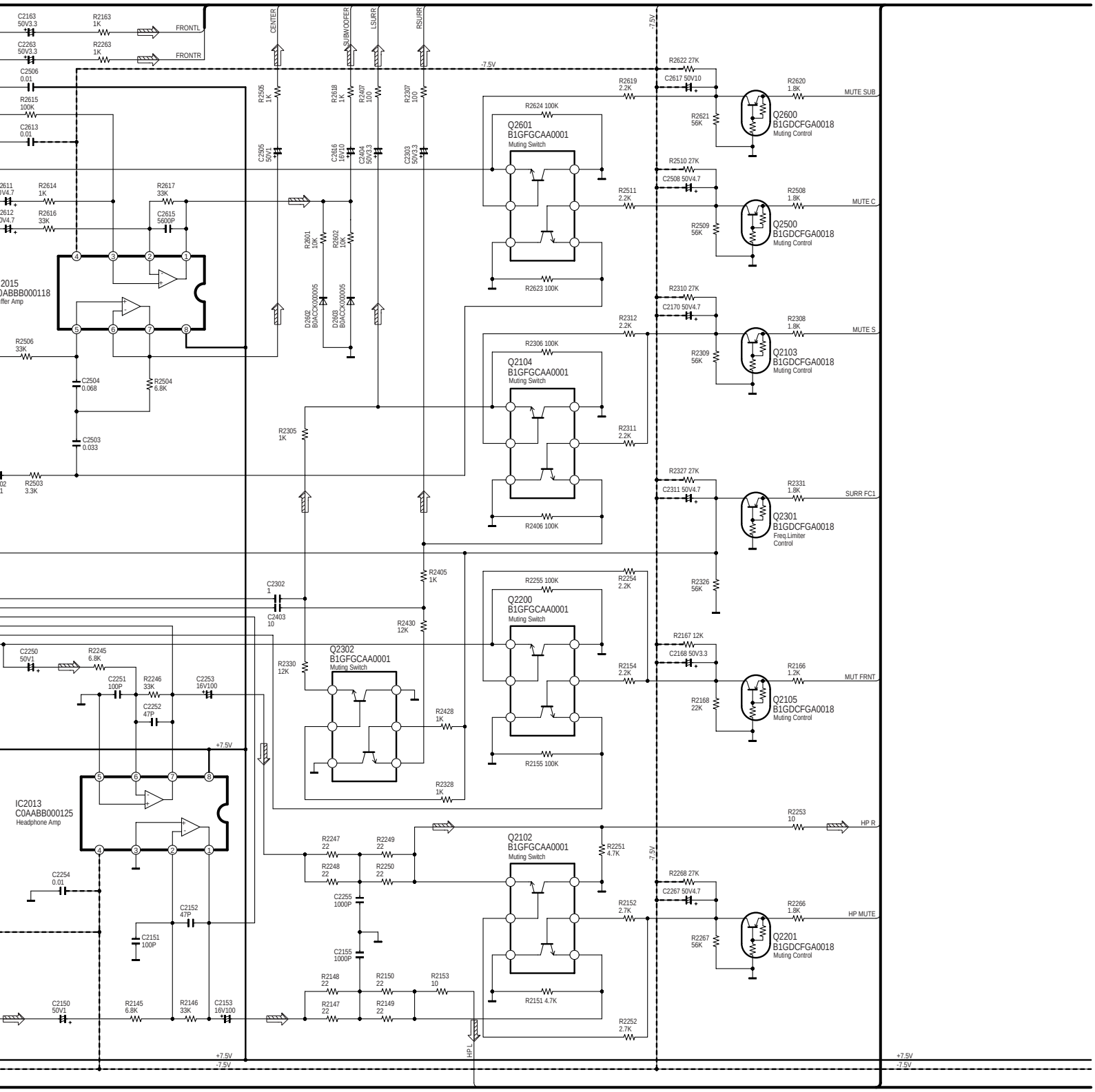

SA-HT840GC/GS/GN MAIN CIRCUIT

17 | 18 | 19 | 20 | 21 | 22

SCHEMATIC DIAGRAM-6

B MAIN CIRCUIT

—— :+B SIGNAL LINE -·-·- :-B SIGNAL LINE ⇨ :MAIN SIGNAL LINE ⇨ :DVD(VIDEO) SIGNAL LINE

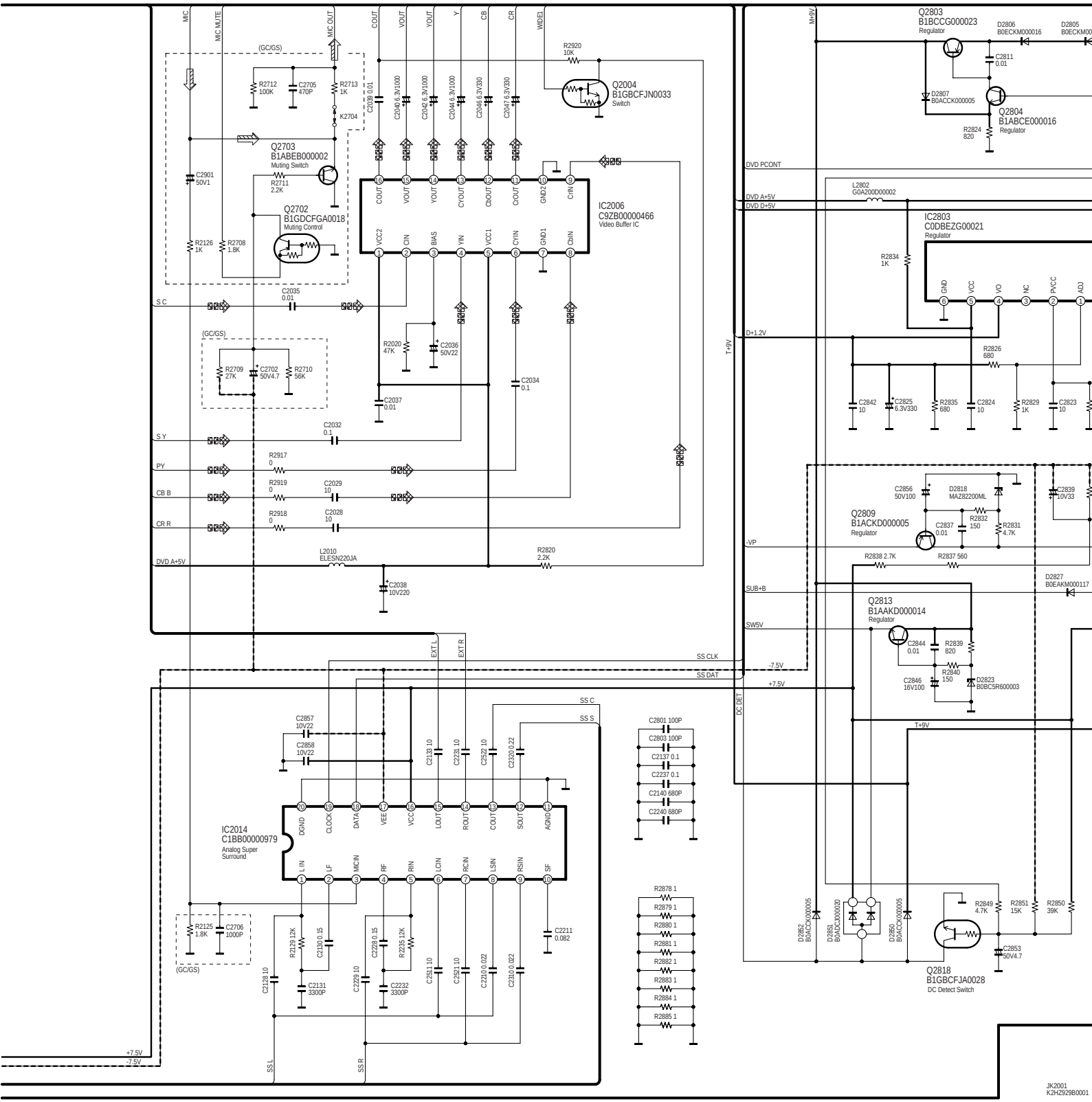

23 | 24 | 25 | 26 | 27 | 28

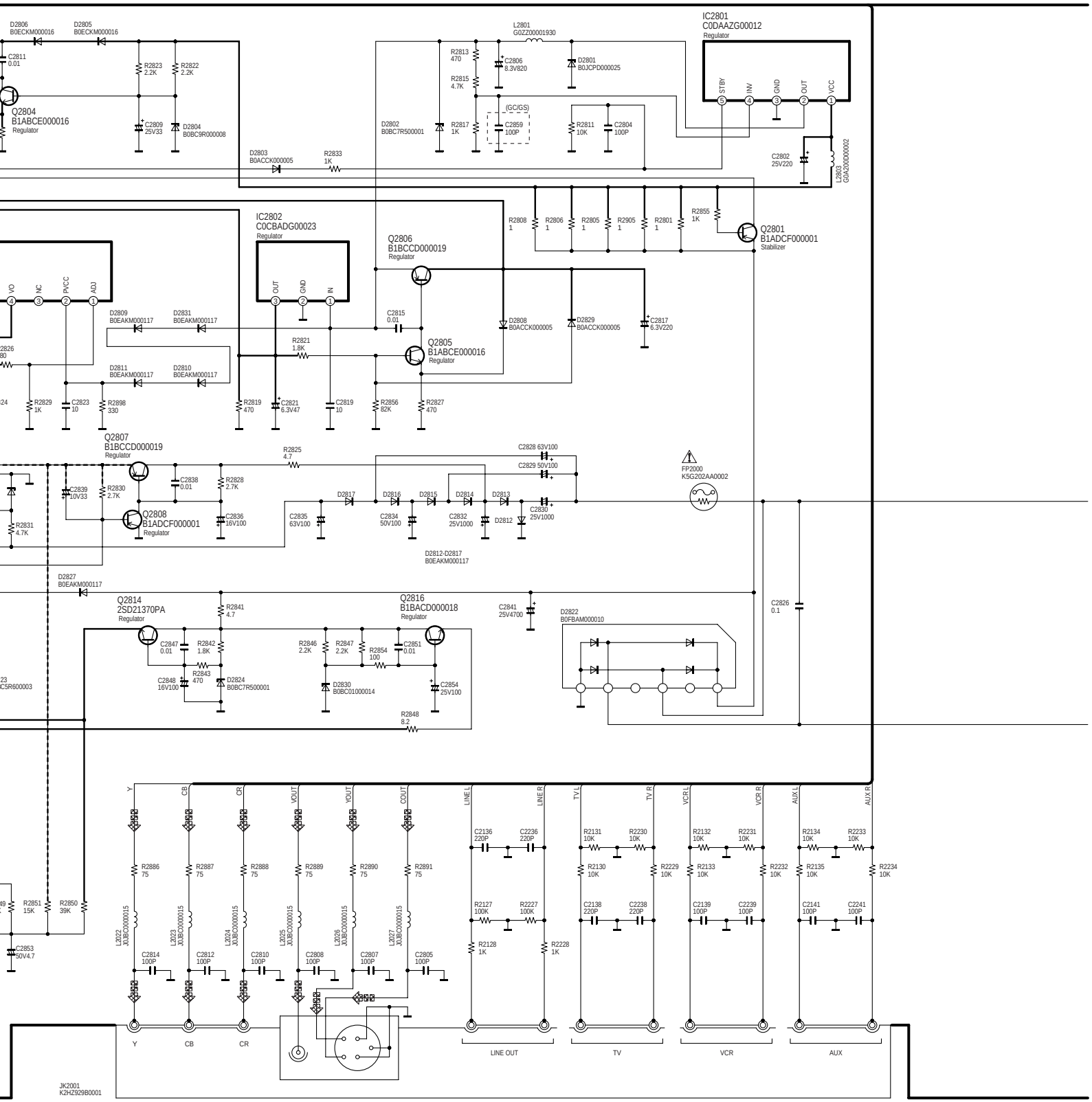

SA-HT840GC/GS/GN MAIN CIRCUIT

28 29 30 31 32 33

SCHEMATIC DIAGRAM-7

B MAIN CIRCUIT

—— :+B SIGNAL LINE :MAIN SIGNAL LINE

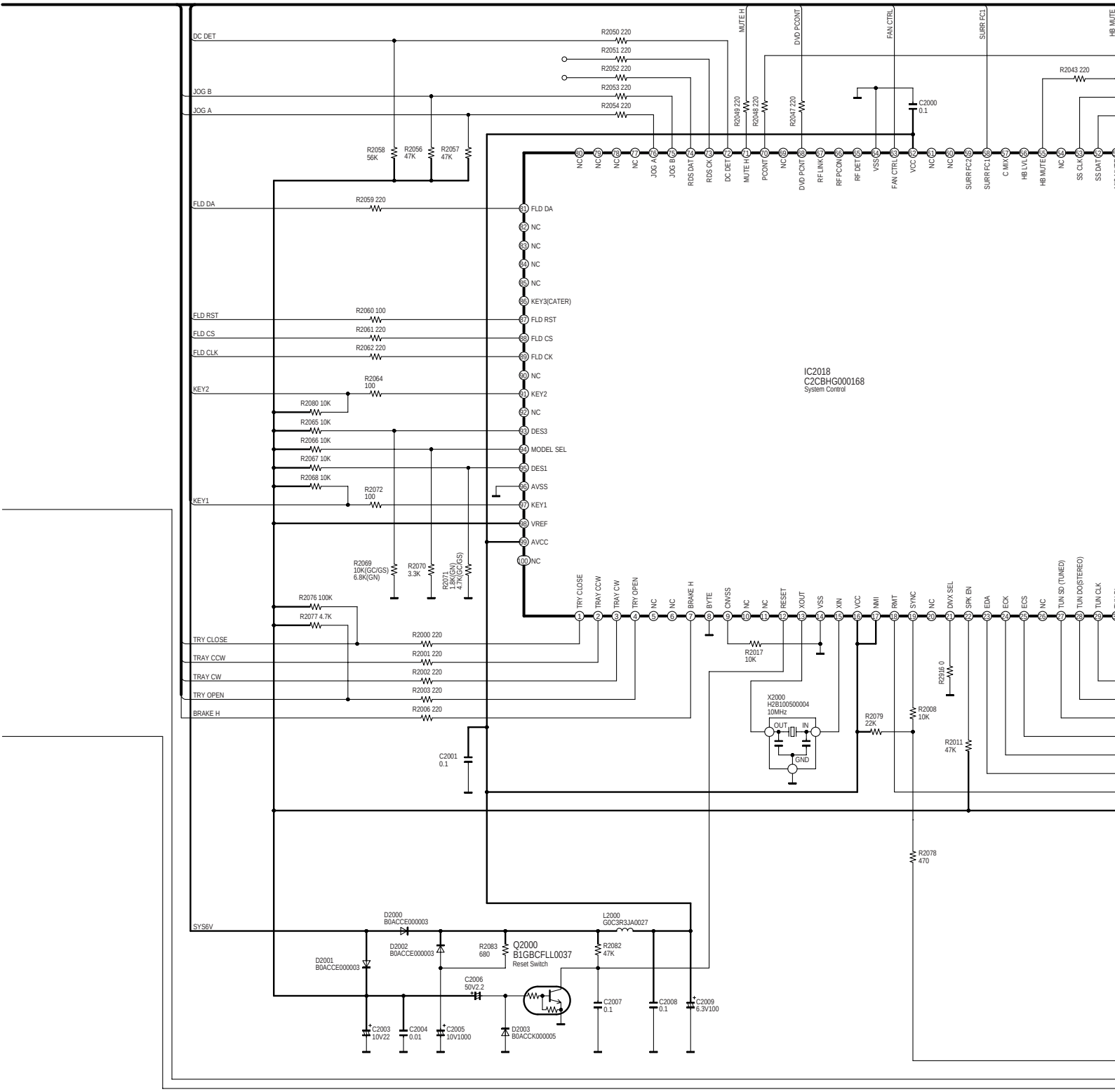

34 | 35 | 36 | 37 | 38 | 39

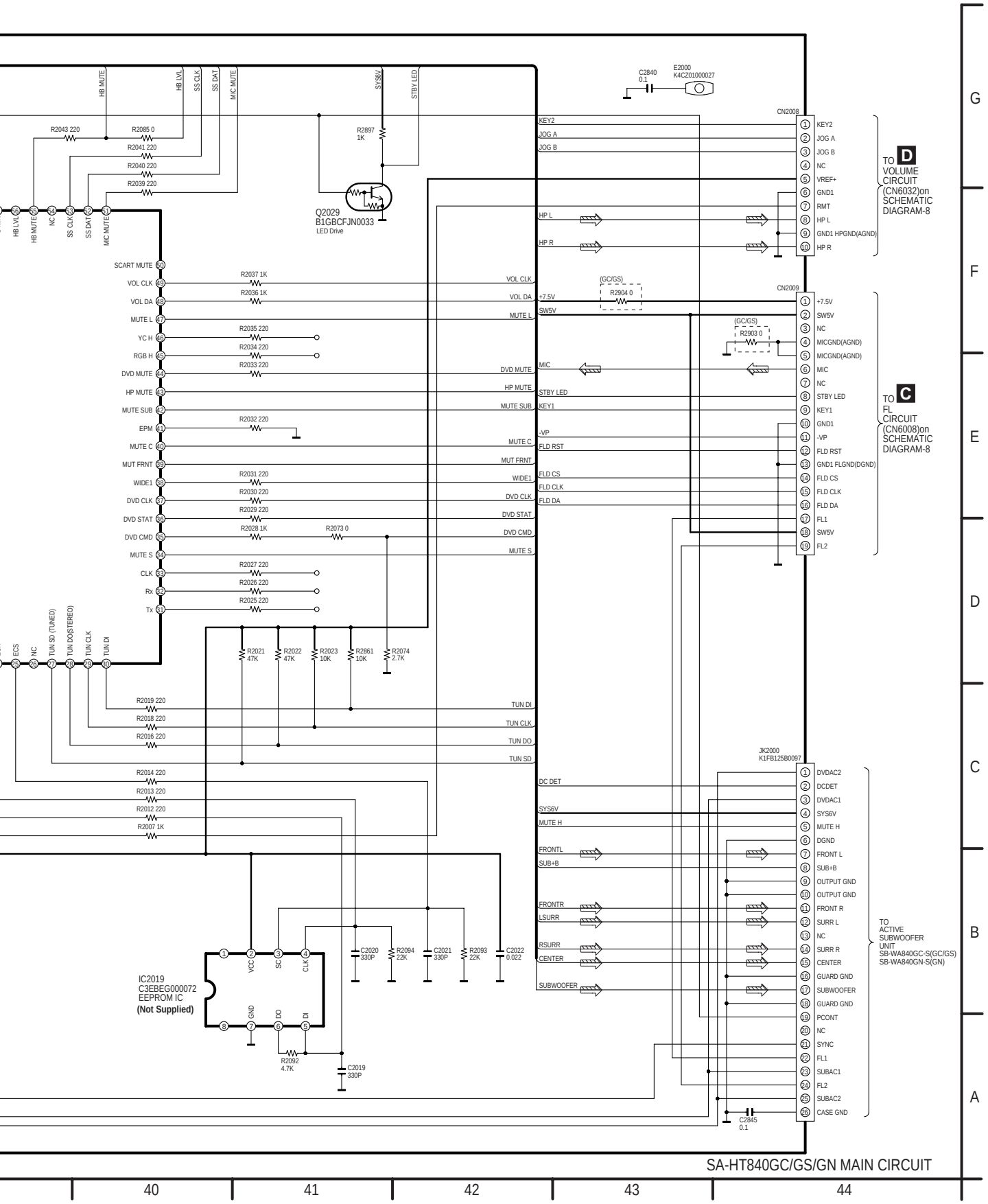
HB MUTE
HB LVL
SS CLK
SS DAT
MIC MUTE
SYS6V
STBY LED
C2840 0.1
E2000 K4CZ01000027
CN2008
KEY2
JOG A
JOG B
NC
VREF+
GND1
RMT
HP L
GND1 HPGND(AGND)
HP R
TO D VOLUME CIRCUIT (CN6032)on SCHEMATIC DIAGRAM-8
R2043 220
R2085 0
R2041 220
R2040 220
R2039 220
R2897 1K
Q2029 B1GBCFJN0033
LED Drive
SCART MUTE
VOL CLK
VOL DA
MUTE L
YC H
RGB H
DVD MUTE
HP MUTE
MUTE SUB
EPM
MUTE C
MUT FRNT
WIDE1
DVD CLK
DVD STAT
DVD CMD
MUTE S
CLK
Rx
Tx
R2037 1K
R2036 1K
R2035 220
R2034 220
R2033 220
R2032 220
R2031 220
R2030 220
R2029 220
R2028 1K
R2073 0
R2027 220
R2026 220
R2025 220
(GC/GS)
R2904 0
+7.5V
SW5V
MIC
STBY LED
KEY1
-VP
FLD RST
FLD CS
FLD CLK
FLD DA
FL1
FL2
CN2009
MICGND(AGND)
GND1 FLGND(DGND)
R2903 0
TO C FL CIRCUIT (CN6008)on SCHEMATIC DIAGRAM-8
ECS
NC
TUN SD (TUNED)
TUN DO(STEREO)
TUN CLK
TUN DI
R2021 47K
R2022 47K
R2023 10K
R2861 10K
R2074 2.7K
R2019 220
R2018 220
R2016 220
R2014 220
R2013 220
R2012 220
R2007 1K
TUN SD
DC DET
SYS6V
MUTE H
FRONTL
SUB+B
FRONTR
LSURR
RSURR
CENTER
SUBWOOFER
JK2000 K1FB125B0097
DVDAC2
DCDET
DVDAC1
DGND
FRONT L
OUTPUT GND
FRONT R
SURR L
SURR R
GUARD GND
PCONT
SYNC
SUBAC1
SUBAC2
CASE GND
TO ACTIVE SUBWOOFER UNIT SB-WA840GC-S(GC/GS) SB-WA840GN-S(GN)
C2020 330P
R2094 22K
C2021 330P
R2093 22K
C2022 0.022
IC2019 C3EBEG000072 EEPROM IC (Not Supplied)
VCC
SC
CLK
GND
DO
DI
R2092 4.7K
C2019 330P
C2845 0.1
SA-HT840GC/GS/GN MAIN CIRCUIT
40
41
42
43
44
G
F
E
D
C
B
A

SCHEMATIC DIAGRAM-8

C FL CIRCUIT

—— :+B SIGNAL LINE ⇨ :MAIN SIGNAL LINE

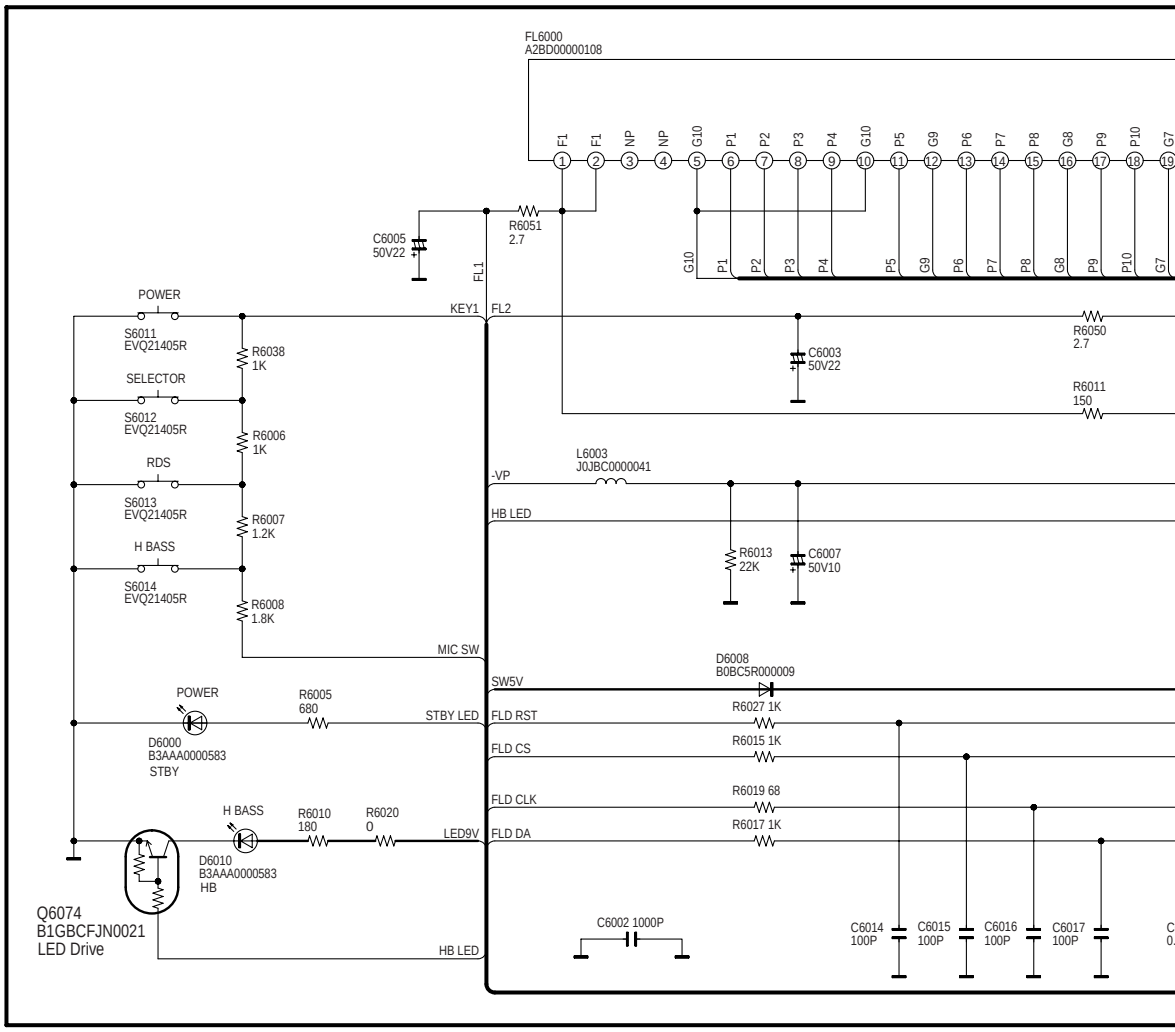

D VOLUME CIRCUIT

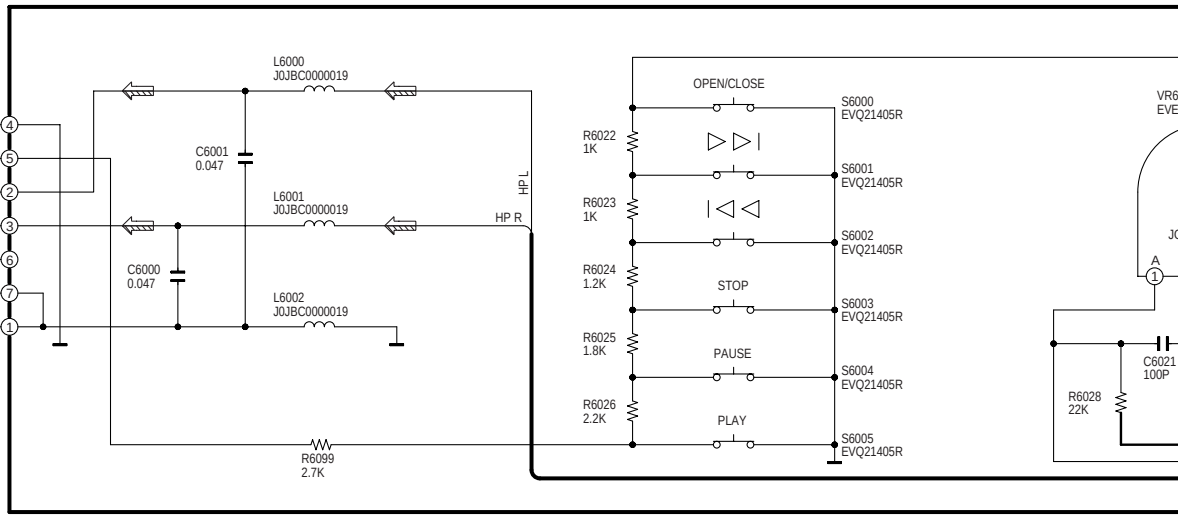

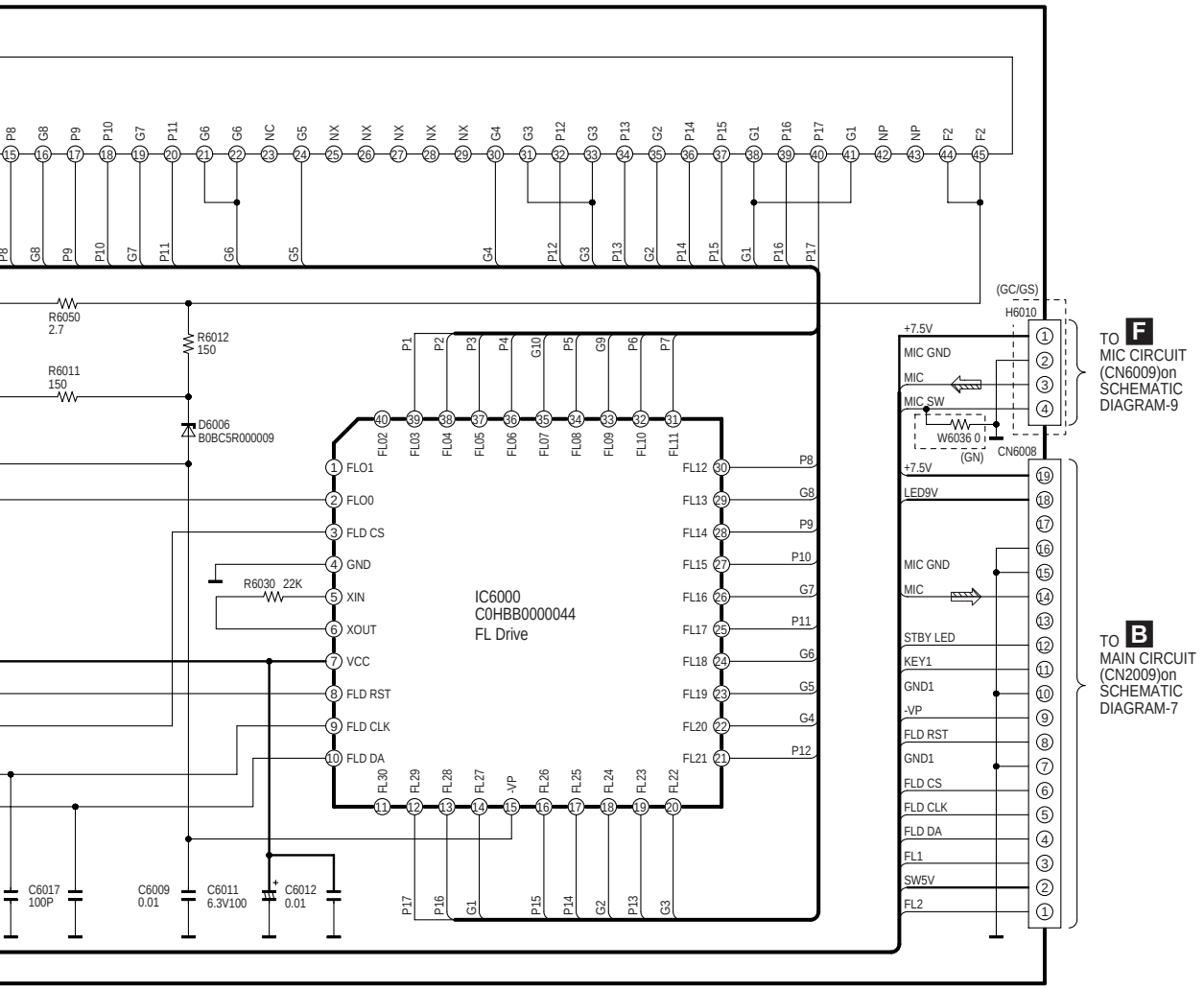

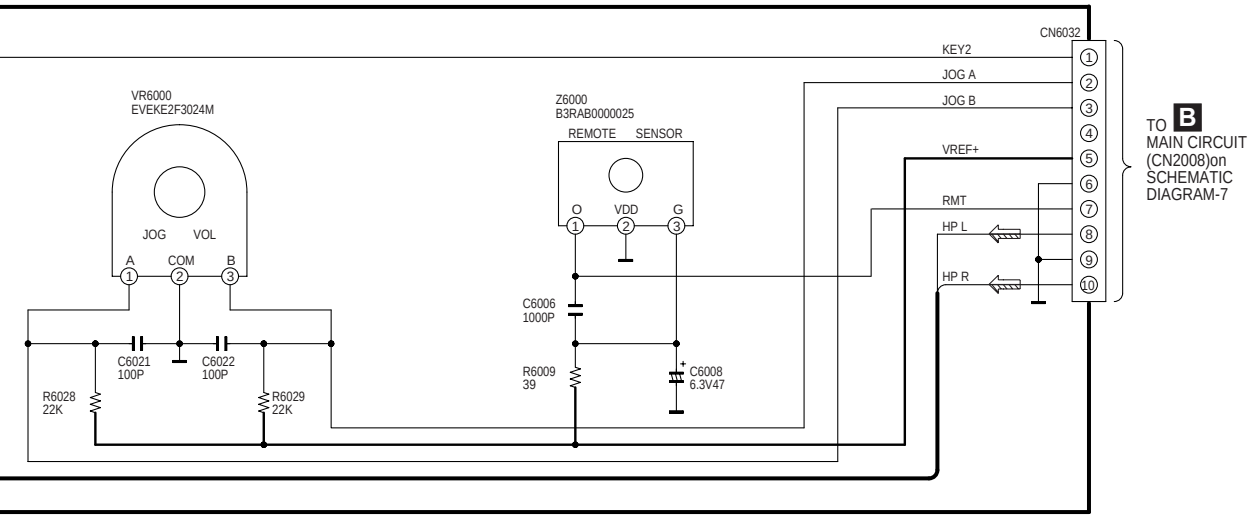

SA-HT840GC/GS/GN FL/VOLUME CIRCUIT

6 | 7 | 8 | 9 | 10 | 11

SCHEMATIC DIAGRAM-9

E TRAY LOADING CIRCUIT

:+B SIGNAL LINE :MAIN SIGNAL LINE

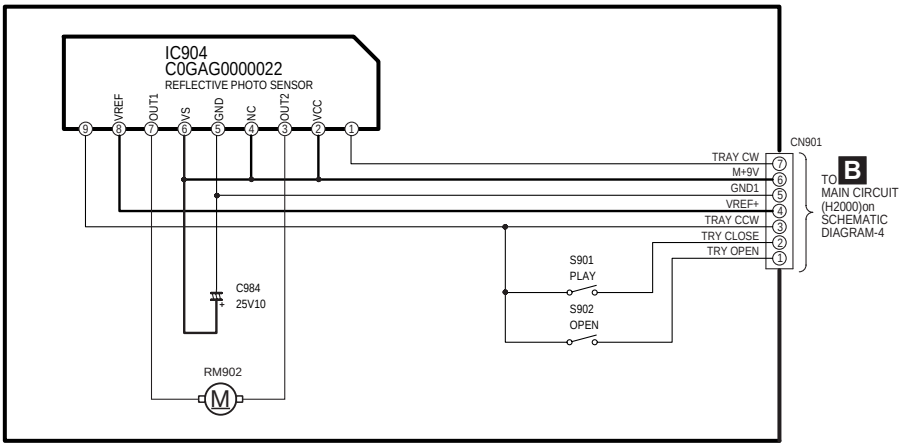

F MIC CIRCUIT(GC/GS ONLY)

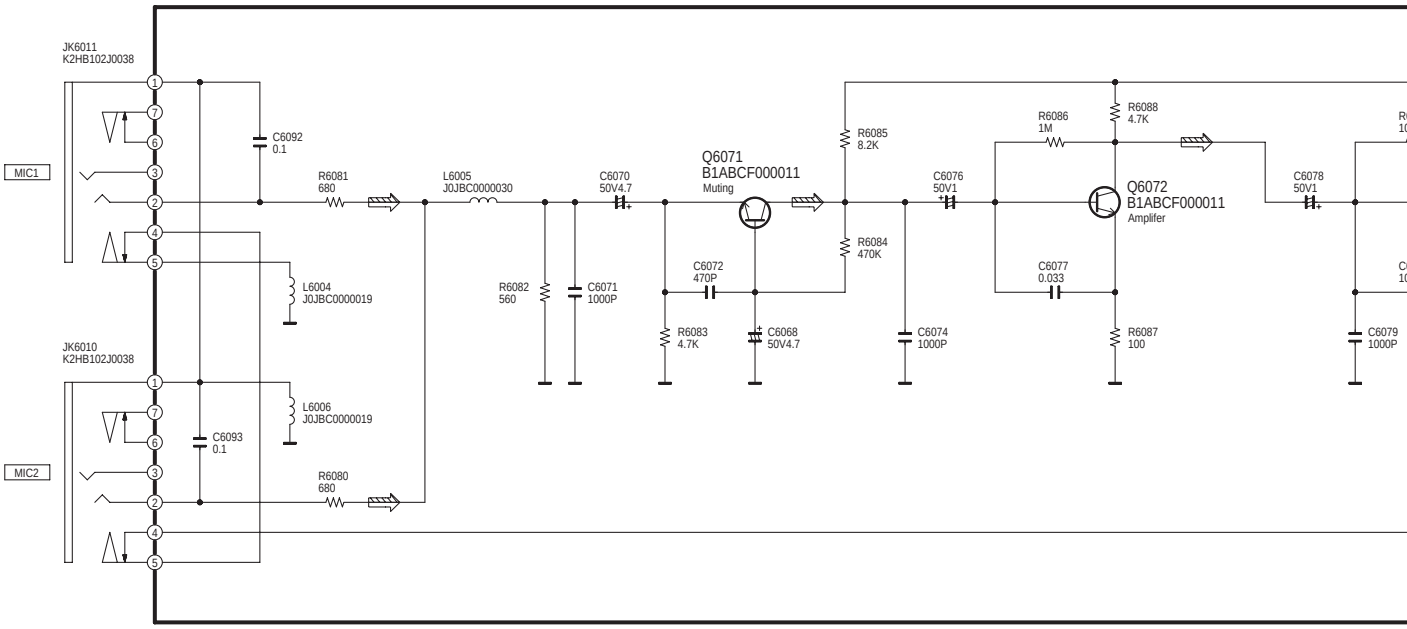

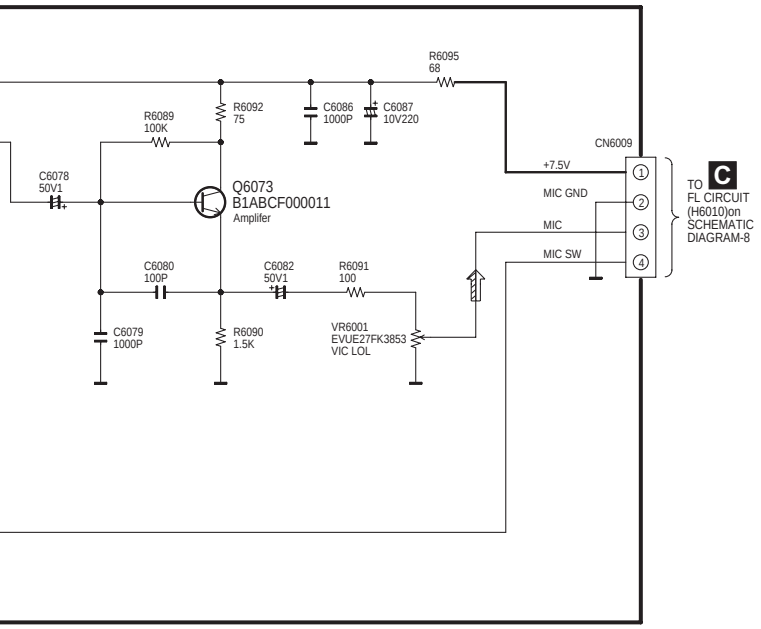

SA-HT840GC/GS/GN TRAY LOADING/MIC CIRCUIT

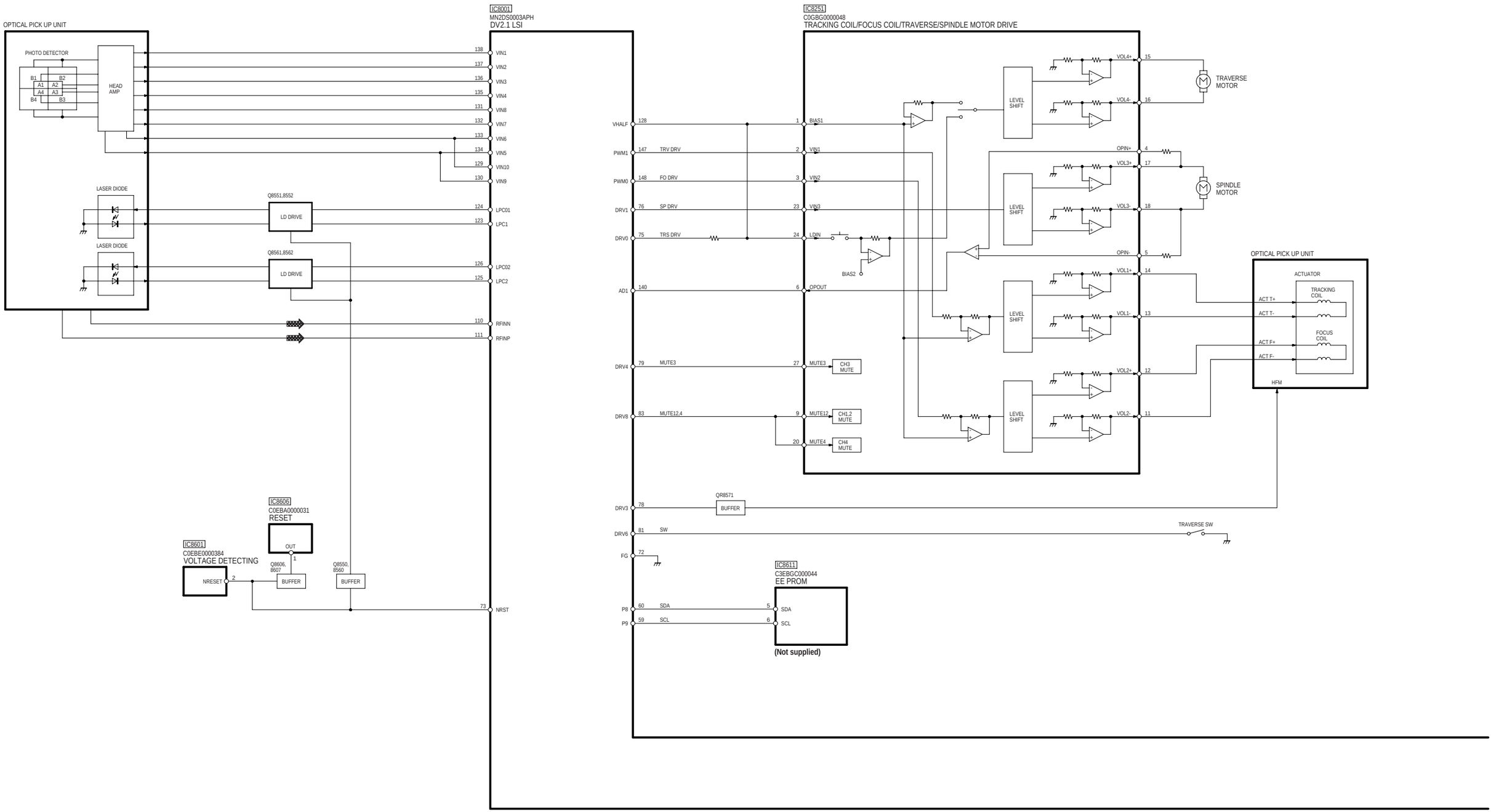
OPTICAL PICK UP UNIT
PHOTO DETECTOR
B1
B2
A1
A2
A4
A3
B4
B3
HEAD AMP
LASER DIODE
LASER DIODE
Q8551,8552
LD DRIVE
Q8561,8562
LD DRIVE
IC8001
MN2DS0003APH
DV2.1 LSI
138 VIN1
137 VIN2
136 VIN3
135 VIN4
131 VIN8
132 VIN7
133 VIN6
134 VIN5
129 VIN10
130 VIN9
124 LPC01
123 LPC1
126 LPC02
125 LPC2
110 RFINN
111 RFINP
73 NRST
IC8606
C0EBA0000031
RESET
OUT
1
Q8606, 8607
BUFFER
Q8550, 8560
BUFFER
IC8601
C0EBE0000384
VOLTAGE DETECTING
NRESET
2
IC8251
C0GBG0000048
TRACKING COIL/FOCUS COIL/TRAVERSE/SPINDLE MOTOR DRIVE
VHALF 128
PWM1 147 TRV DRV
PWM0 148 FO DRV
DRV1 76 SP DRV
DRV0 75 TRS DRV
AD1 140
DRV4 79 MUTE3
DRV8 83 MUTE12,4
DRV3 78
DRV6 81 SW
FG 72
P8 60 SDA
P9 59 SCL
1 BIAS1
2 VIN1
3 VIN2
23 VIN3
24 LDIN
BIAS2
6 OPOUT
27 MUTE3
CH3 MUTE
9 MUTE12
CH1,2 MUTE
20 MUTE4
CH4 MUTE
QR8571
BUFFER
5 SDA
6 SCL
IC8611
C3EBGC000044
EE PROM
(Not supplied)
LEVEL SHIFT
LEVEL SHIFT
LEVEL SHIFT
LEVEL SHIFT
VOL4+ 15
VOL4- 16
OPIN+ 4
VOL3+ 17
VOL3- 18
OPIN- 5
VOL1+ 14
VOL1- 13
VOL2+ 12
VOL2- 11
TRAVERSE MOTOR
SPINDLE MOTOR
TRAVERSE SW
OPTICAL PICK UP UNIT
ACTUATOR
TRACKING COIL
FOCUS COIL
ACT T+
ACT T-
ACT F+
ACT F-
HFM

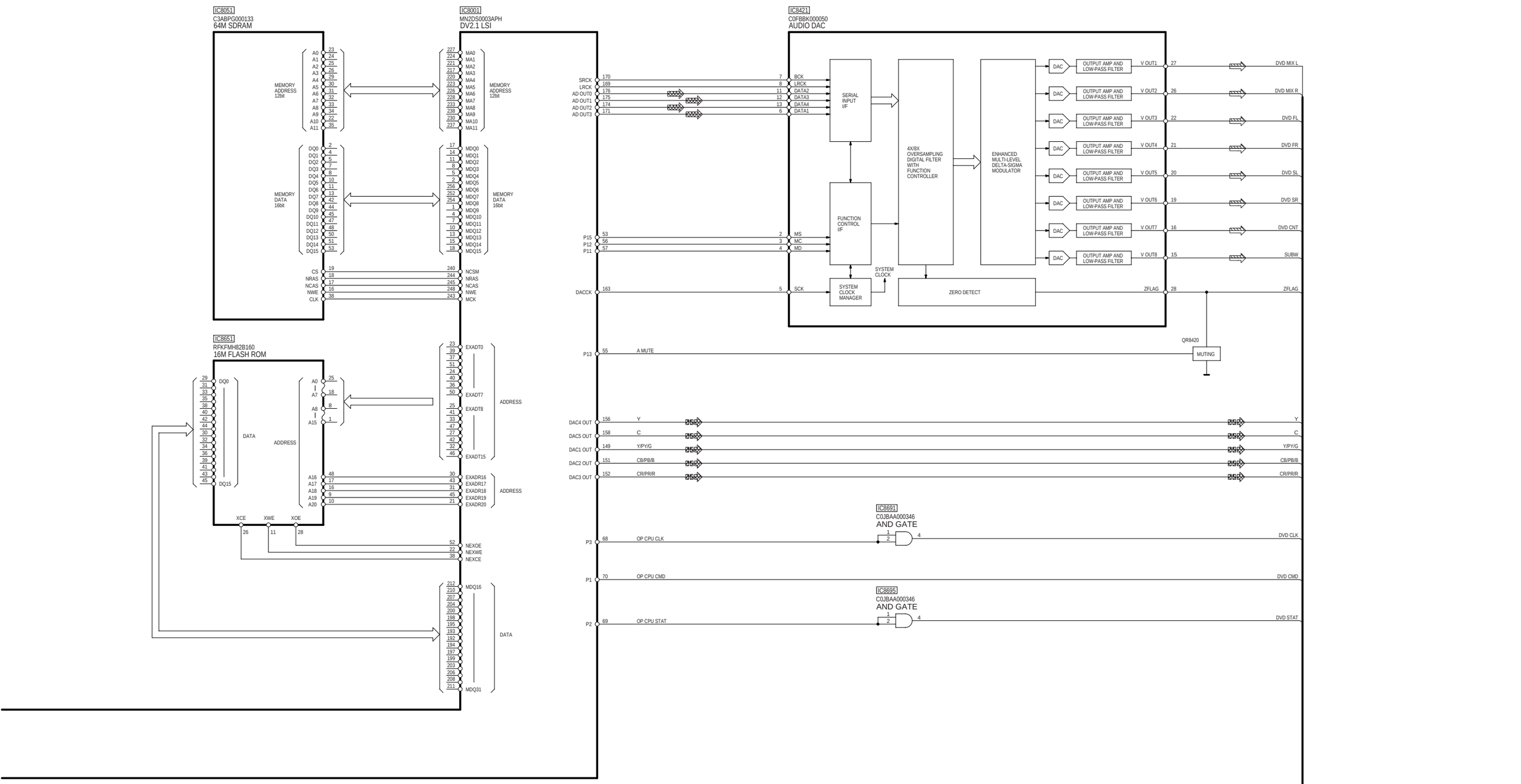
IC8051
C3ABPG000133
64M SDRAM
MEMORY ADDRESS 12bit
MEMORY DATA 16bit
IC8001
MN2DS0003APH
DV2.1 LSI
MEMORY ADDRESS 12bit
MEMORY DATA 16bit
IC8421
C0FBBK000050
AUDIO DAC
SERIAL INPUT I/F
FUNCTION CONTROL I/F
SYSTEM CLOCK MANAGER
SYSTEM CLOCK
4X/8X OVERSAMPLING DIGITAL FILTER WITH FUNCTION CONTROLLER
ENHANCED MULTI-LEVEL DELTA-SIGMA MODULATOR
DAC
OUTPUT AMP AND LOW-PASS FILTER
ZERO DETECT
V OUT1
V OUT2
V OUT3
V OUT4
V OUT5
V OUT6
V OUT7
V OUT8
DVD MIX L
DVD MIX R
DVD FL
DVD FR
DVD SL
DVD SR
DVD CNT
SUBW
ZFLAG
SRCK
LRCK
AD OUT0
AD OUT1
AD OUT2
AD OUT3
BCK
LRCK
DATA2
DATA3
DATA4
DATA1
P15
P12
P11
MS
MC
MD
DACCK
SCK
P13
A MUTE
QR8420
MUTING
DAC4 OUT
DAC5 OUT
DAC1 OUT
DAC2 OUT
DAC3 OUT
Y
C
Y/PY/G
CB/PB/B
CR/PR/R
IC8651
RFKFMH82B160
16M FLASH ROM
DATA
ADDRESS
XCE
XWE
XOE
EXADT0
EXADT7
EXADT8
EXADT15
EXADR16
EXADR17
EXADR18
EXADR19
EXADR20
NEXOE
NEXWE
NEXCE
MDQ16
MDQ31
IC8691
C0JBAA000346
AND GATE
P3
OP CPU CLK
DVD CLK
P1
OP CPU CMD
DVD CMD
IC8695
C0JBAA000346
AND GATE
P2
OP CPU STAT
DVD STAT

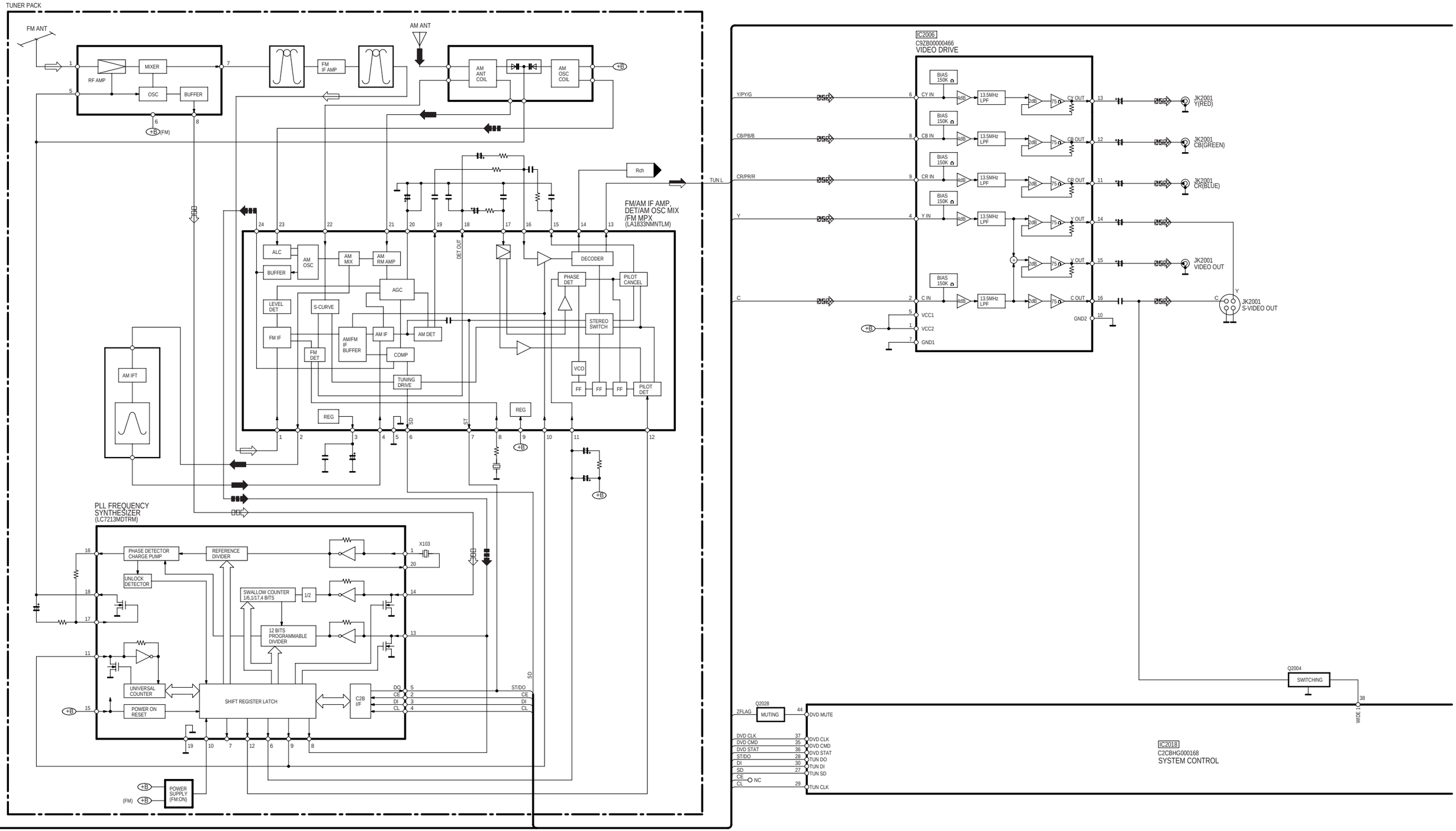

SA-HT840GC/GS/GN BLOCK DIAGRAM

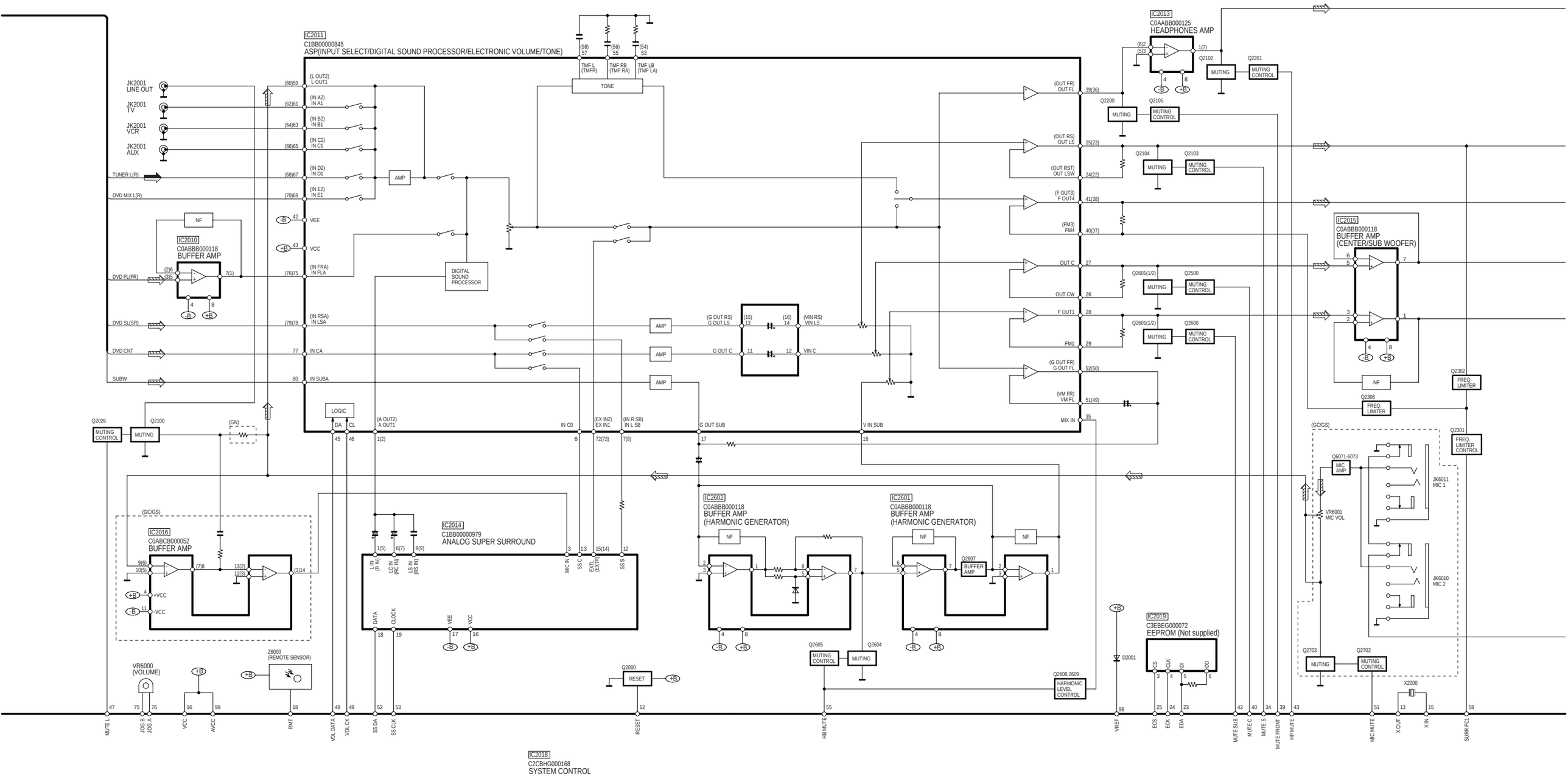

SA-HT840GC/GS/GN BLOCK DIAGRAM

SIGNAL LINES

: MAIN SIGNAL LINE	: AM SIGNAL LINE	: DVD AUDIO SIGNAL LINE
: FM SIGNAL LINE	: AM OSC SIGNAL LINE	: DVD VIDEO SIGNAL LINE
: FM OSC SIGNAL LINE	: FM /AM SIGNAL LINE	: CD-DA (AUDIO /VIDEO) SIGNAL LINE

( ) Indicates the Pin No. of Right Channel.

NOTE : Signal Lines are applicable to the Left Channel only.

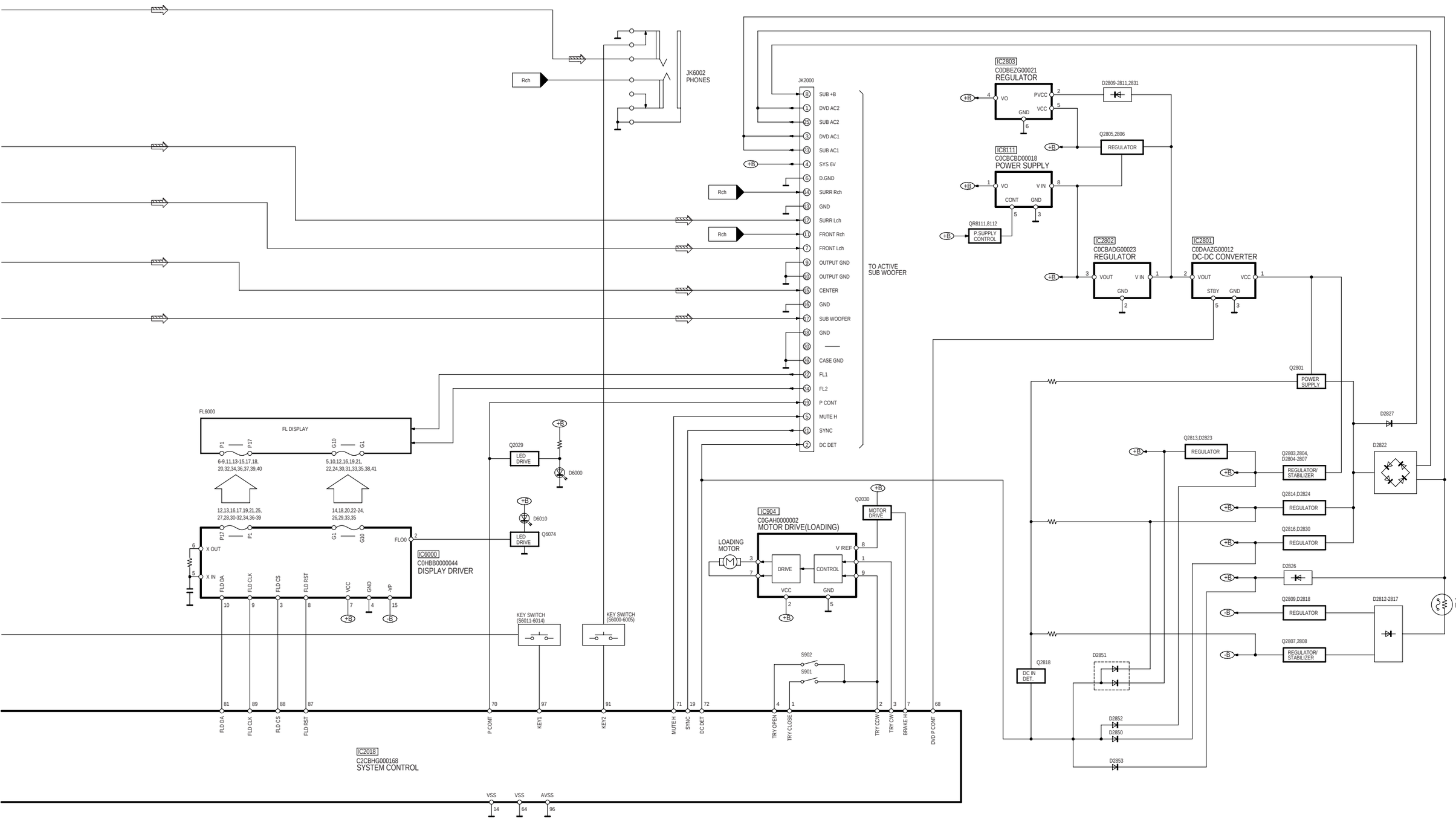

SA-HT840GC/GS/GN BLOCK DIAGRAM

FL P.C.B.

Ref No.	IC6000																			
MODE	1	2	3	4	5	6	7	8	9	10	11	12	13	14	15	16	17	18	19	20
CD PLAY	-22.2	-10.2	1.7	0	1.8	1.8	4.2	4.6	3.5	0.4	-22.2	-22.2	-22.2	-19.9	-22.3	-19.9	-17.4	-19.9	-19.8	-19.9
STANDBY	0	0	0	0	0.6	0.6	1.2	0	0	0	0	0	0	0	0	0	0	0	0	0

Ref No.	IC6000																			
MODE	21	22	23	24	25	26	27	28	29	30	31	32	33	34	35	36	37	38	39	40
CD PLAY	-10.3	-19.9	-19.9	-19.9	-22.2	-19.9	-22.3	-22.3	-19.9	-19.9	-17.5	-22.3	-19.9	-19.8	-19.9	-22.3	-15.0	-12.7	-12.7	-22.3
STANDBY	0	0	0	0	0	0	0	0	0	0	0	0	0	0	0	0	0	0	0	0

Ref No.	Q6074		
MODE	E	C	B
CD PLAY	0	8.1	-10.3
STANDBY	0	2.1	0

MIC P.C.B.

Ref No.	Q6071				Q6072				Q6073		
MODE	E	C	B		E	C	B		E	C	B
CD PLAY	2.0	3.3	2.5		0.1	3.3	0.7		4.9	6.7	5.5
STANDBY	0	0.4	0.4		0	0.4	0.4		0	0.4	0.4

Tray Loading P.C.B.

Ref No.	IC904								
MODE	1	2	3	4	5	6	7	8	9
CD PLAY	4.7	8.0	0.6	8.0	0.1	8.0	0.6	2.7	4.7
STANDBY	0	1.8	0.8	1.8	0	2.1	0.9	4.9	0

Ref No.	IC2006																			
MODE	1	2	3	4	5	6	7	8	9	10	11	12	13	14	15	16				
CD PLAY	4.7	2.2	2.4	1.6	4.7	1.6	0	2.2	2.2	0	2.2	2.2	1.6	1.6	1.6	2.2				
STANDBY	0	0	0	0	0	0	0	0.2	0.1	0	0	0	0	0	0	0				

Ref No.	IC2010							
MODE	1	2	3	4	5	6	7	8
CD PLAY	0	0	0	-6.8	0	0	0	7.0
STANDBY	0.5	0.5	0	0.2	0	0.5	0.5	0.3

Ref No.	IC2011																			
MODE	1	2	3	4	5	6	7	8	9	10	11	12	13	14	15	16	17	18	19	20
CD PLAY	0	0	0	-	-	0	0	0	-	0	0	0	0	0	0	0	0	0	0	0
STANDBY	0	0	0	0.2	0.2	0	0	0	0.2	0	0.4	0	0.2	0	0.1	0	0	0	0	0

Ref No.	IC2011																			
MODE	21	22	23	24	25	26	27	28	29	30	31	32	33	34	35	36	37	38	39	40
CD PLAY	0	0	0	0	0	0	0	0	0	0	0	0	-6.8	2.1	0	0	0	0	0	0
STANDBY	0	0	0	0	0	0	0	0.4	0.2	0.1	0.1	0	0.2	0.1	0	0.1	0	0	0.1	0

Ref No.	IC2011																			
MODE	41	42	43	44	45	46	47	48	49	50	51	52	53	54	55	56	57	58	59	60
CD PLAY	0	-6.9	7.0	0	0	0	0	0	0	0	0	0	0	0	0	0	0	0	0	0
STANDBY	0	0.2	0.3	0	0	0	0	0	0	0	0	0	0	0	0	0	0.2	0.2	0	0

Ref No.	IC2011																			
MODE	61	62	63	64	65	66	67	68	69	70	71	72	73	74	75	76	77	78	79	80
CD PLAY	0	0	0	0	0	0	0	0	0	0	0	0	0	0	0	0	0	0	0	0
STANDBY	0	0	0	0	0	0	0	0	0	0	0	0	0	0	0	0	0	0	0	0

Ref No.	IC2013							
MODE	1	2	3	4	5	6	7	8
CD PLAY	0	0	0	-6.8	0	0	0	7.0
STANDBY	0.6	0.5	0	0.2	0	0.6	0.6	0.3

Ref No.	IC2014																			
MODE	1	2	3	4	5	6	7	8	9	10	11	12	13	14	15	16	17	18	19	20
CD PLAY	0	0	0	0	0	0	0	0	0	0	0	0	0	0	0	7.0	-6.8	0	0	0
STANDBY	0	0	0	0	0	0	0	0	0	0	0	0	0	0.1	0.1	0.3	0.2	0	0	0

Ref No.	IC2015							
MODE	1	2	3	4	5	6	7	8
CD PLAY	0	0	0	-6.8	0	0	0	7.0
STANDBY	0.5	0.4	0	0.2	0	0	0	0.3

Ref No.	IC2016																			
MODE	1	2	3	4	5	6	7	8	9	10	11	12	13	14						
CD PLAY	0	0	0	7.0	0	0	0	0	0	0	-6.8	0	0	0						
STANDBY	0	0	0	0.5	0	0	0	0	0	0	0.2	0	0	0						

Ref No.	IC2018																			
MODE	1	2	3	4	5	6	7	8	9	10	11	12	13	14	15	16	17	18	19	20
CD PLAY	0.1	4.7	4.7	4.7	0	0	4.6	0	0	0	0	4.7	2.4	0	2.3	4.7	4.7	4.7	2.1	0
STANDBY	0	0	0	0.1	0	0	0	0	0	0	0	4.9	2.5	0	2.4	4.9	4.9	4.8	2.7	0

Ref No.	IC2018																			
MODE	21	22	23	24	25	26	27	28	29	30	31	32	33	34	35	36	37	38	39	40
CD PLAY	0	4.7	0	0	0	0	4.7	4.7	4.7	4.7	0	0	0	4.6	0	4.0	4.4	4.6	0	4.6
STANDBY	0	4.8	0	0	0	0	0	0	0	0	0	0	0	0	0	0.1	0.1	0	0	0

Ref No.	IC2018																			
MODE	41	42	43	44	45	46	47	48	49	50	51	52	53	54	55	56	57	58	59	60
CD PLAY	0	4.6	0	0.1	0	0	0	0	0	0	4.7	0	0	0	4.6	4.6	4.6	4.5	4.7	0
STANDBY	0	0	0	0	0	0	0	0	0	0	0	0	0	0	0	0	0	0	0	0

Ref No.	IC2018																			
MODE	61	62	63	64	65	66	67	68	69	70	71	72	73	74	75	76	77	78	79	80
CD PLAY	0	4.7	4.7	0	0	0	0	4.6	0	4.4	4.7	4.7	2.5	0	0	0	0	0	0	0
STANDBY	0	4.9	0	0	0	0	0	0	0	0	0	0.7	0	0	0	0	0	0	0	0

Ref No.	IC2018																			
MODE	81	82	83	84	85	86	87	88	89	90	91	92	93	94	95	96	97	98	99	100
CD PLAY	0	0	0	4.7	0	0	4.7	0	0	0	4.7	0	0.7	1.2	0.4	0	1.6	4.8	4.7	4.7
STANDBY	0	0	0	0	0	0	0	0	0	0	4.8	0	0.7	1.2	0.4	0	1.6	4.9	4.9	0

Ref No.	IC2019							
MODE	1	2	3	4	5	6	7	8
CD PLAY	-	4.8	0	0	0	0	0	-
STANDBY	-	4.9	0	0	0	0	0	-

Ref No.	IC2601										IC2602									
MODE	1	2	3	4	5	6	7	8			1	2	3	4	5	6	7	8		
CD PLAY	0.7	0	0	-6.8	0	0	0	7.0			0	0	0	-6.8	0	0	0	7.0		
STANDBY	0	0.1	0	0.2	0	0	0	0.3			0	0.1	0	0.2	0	0	0	0.3		

Ref No.	IC2801							IC2802					IC2803							
MODE	1	2	3	4	5			1	2	3			1	2	3	4	5			
CD PLAY	16.1	6.1	0	1.0	3.7			6.1	0	5.0			0.8	3.0	0	1.4	5.0			
STANDBY	0.5	0	0	0	0			0	0	0			0	0	0	0	0			

Ref No.	Q2000				Q2004				Q2026				Q2028				Q2029			
MODE	E	C	B		E	C	B		E	C	B		E	C	B		E	C	B	
CD PLAY	0	4.6	0		0	0	4.5		0	-4.6	0		0.1	0.1	3.9		0	0.1	3.4	
STANDBY	0	4.9	0		0	0	0		0	0.1	0		0	0	0		0	3.3	0	

Ref No.	Q2030				Q2100								Q2102							
MODE	E	C	B		1	2	3	4	5	6			1	2	3	4	5	6		
CD PLAY	0.1	0.1	4.5		0	-4.6	0	0	-4.6	0			0	-4.6	0	0	-4.6	0		
STANDBY	0	4.9	0		0	0.1	0	0	0.1	0			0	0.1	0	0	0.1	0		

Ref No.	Q2103				Q2104							Q2105								
MODE	E	C	B		1	2	3	4	5	6		E	C	B						
CD PLAY	1.8	1.7	0		0	0.7	0	0	0.7	0		0	-4.4	0						
STANDBY	0	0.1	0		0	0.1	0	0	0.1	0		0	0.1	0						

Ref No.	Q2200							Q2201				Q2301								
MODE	1	2	3	4	5	6		E	C	B		E	C	B						
CD PLAY	0	-4.4	0	0	-4.4	0		0	-4.6	0		1.2	1.2	0						
STANDBY	0	0.1	0	0	0.1	0		0	0.1	0		0	0.1	0						

Ref No.	Q2302								Q2306							Q2500				
MODE	1	2	3	4	5	6			1	2	3	4	5	6		E	C	B		
CD PLAY	0	0.7	0	0	0.7	0			0	0.6	0	0	0.6	0		2.1	2.1	0		
STANDBY	0	0.1	0	0	0.1	0			0	0.1	0	0	0.1	0		0	0.1	0		

Ref No.	Q2600				Q2601							Q2604				Q2605				
MODE	E	C	B		1	2	3	4	5	6		E	C	B		E	C	B		
CD PLAY	2.2	2.1	0		0	0.7	0	0	0.7	0		0	0	0.7		2.0	2.0	0		
STANDBY	0	0.1	0		0	0.1	0	0	0.1	0		0	0	0.1		0	0.1	0		

Ref No.	Q2607				Q2608				Q2609				Q2702				Q2703			
MODE	E	C	B		E	C	B		E	C	B		E	C	B		E	C	B	
CD PLAY	-0.7	7.0	0		0	0	0.7		2.0	2.0	0		2.0	2.0	0		0	0	0.7	
STANDBY	0.2	0.3	0		0.1	0	0.1		0	0.1	0		0	0.1	0		0	0	0.1	

Ref No.	Q2801				Q2803				Q2804				Q2805				Q2806			
MODE	E	C	B		E	C	B		E	C	B		E	C	B		E	C	B	
CD PLAY	16.2	-3.0	16.1		14.0	9.3	14.5		8.6	14.0	9.2		4.3	5.4	4.9		6.1	5.0	5.4	
STANDBY	0.5	0.2	0.5		0	0.3	0.2		0	0	0.5		0	0	0		0	0	0	

Ref No.	Q2807				Q2808				Q2809				Q2813				Q2814			
MODE	E	C	B		E	C	B		E	C	B		E	C	B		E	C	B	
CD PLAY	-6.8	-13.8	-7.4		0	-7.4	-0.6		-22.4	-39.6	-23.0		9.3	5.0	5.6		7.0	15.6	7.5	
STANDBY	0.2	-0.1	-0.1		0	-0.1	0.2		0	-0.4	-0.4		0.3	0.3	0.3		0.3	0.5	0.5	

Ref No.	Q2816				Q2818															
MODE	E	C	B		E	C	B													
CD PLAY	10.0	15.7	10.4		0	4.7	-3.0													
STANDBY	0.5	0.5	0.5		0	0.7	0.2													

Ref No.	IC8001																			
MODE	1	2	3	4	5	6	7	8	9	10	11	12	13	14	15	16	17	18	19	20
CD PLAY	3.1	3.0	0	3.1	3.3	3.4	3.0	3.1	0	0	3.1	3.4	2.9	3.1	3.0	0	3.0	3.0	3.4	0
Ref No.	IC8001																			
MODE	21	22	23	24	25	26	27	28	29	30	31	32	33	34	35	36	37	38	39	40
CD PLAY	3.4	-	-	1.5	0.8	1.2	1.0	3.4	0	0.5	1.0	-	-	3.4	0	-	-	2.4	-	-
Ref No.	IC8001																			
MODE	41	42	43	44	45	46	47	48	49	50	51	52	53	54	55	56	57	58	59	60
CD PLAY	-	-	-	1.2	-	-	-	3.4	0	-	-	2.5	0	0	0	-	-	-	-	-
Ref No.	IC8001																			
MODE	61	62	63	64	65	66	67	68	69	70	71	72	73	74	75	76	77	78	79	80
CD PLAY	-	3.4	0	0	0.1	1.0	1.0	3.0	2.8	3.1	0.1	0.1	3.2	0	1.7	.0	1.7	0.1	3.4	0
Ref No.	IC8001																			
MODE	81	82	83	84	85	86	87	88	89	90	91	92	93	94	95	96	97	98	99	100
CD PLAY	3.4	0.1	3.4	3.4	0.1	0.1	0	0.1	1.2	0	0	0	0	0.1	0.1	0	0	3.4	0.8	0.1
Ref No.	IC8001																			
MODE	101	102	103	104	105	106	107	108	109	110	111	112	113	114	115	116	117	118	119	120
CD PLAY	2.4	2.1	1.9	0.3	0	1.9	3.4	2.1	2.1	1.9	1.8	1.1	1.1	1.7	1.7	1.7	1.7	3.3	2.0	1.7
Ref No.	IC8001																			
MODE	121	122	123	124	125	126	127	128	129	130	131	132	133	134	135	136	137	138	139	140
CD PLAY	1.5	0	0	0.1	0	0	2.3	1.7	2.6	2.6	2.6	2.6	2.6	2.6	2.4	2.4	0	2.4	0	0
Ref No.	IC8001																			
MODE	141	142	143	144	145	146	147	148	149	150	151	152	153	154	155	156	157	158	159	160
CD PLAY	0.5	0	0	0	0	1.1	2.2	1.7	2.6	2.6	2.6	2.6	2.6	2.6	2.4	2.4	0	2.4	3.4	0
Ref No.	IC8001																			
MODE	161	162	163	164	165	166	167	168	169	170	171	172	173	174	175	176	177	178	179	180
CD PLAY	3.4	0	0	0	0	3.4	3.4	1.7	0	1.7	0.9	1.2	0	0	0	0.9	1.7	3.4	0	3.4
Ref No.	IC8001																			
MODE	181	182	183	184	185	186	187	188	189	190	191	192	193	194	195	196	197	198	199	200
CD PLAY	0	3.4	0	0	-	-	-	-	-	3.4	0	1.0	1.7	0	1.5	3.4	1.3	0.5	1.5	1.4
Ref No.	IC8001																			
MODE	201	202	203	204	205	206	207	208	209	210	211	212	213	214	215	216	217	218	219	220
CD PLAY	0	3.4	3.4	1.2	0	1.7	1.4	1.4	3.4	3.4	1.0	1.8	0	-	-	3.4	2	0	1.2	1.6
Ref No.	IC8001																			
MODE	221	222	223	224	225	226	227	228	229	230	231	232	233	234	235	236	237	238	239	240
CD PLAY	0.2	0	1.7	0.2	3.4	1.7	0.1	0.9	0	0.1	3.4	1.6	-	2.2	0	1.2	0.1	0.1	3.4	3.2
Ref No.	IC8001																			
MODE	241	242	243	244	245	246	247	248	249	250	251	252	253	254	255	256				
CD PLAY	1.7	0	1.7	3.3	3.4	3.4	0	3.3	2.6	0	3.6	2.8	0	2.9	3.4	2.9				
Ref No.	IC8051																			
MODE	1	2	3	4	5	6	7	8	9	10	11	12	13	14	15	16	17	18	19	20
CD PLAY	3.4	3.2	3.4	3.1	3.2	0.1	3.2	3.4	3.1	3.0	-	0.1	2.9	3.4	2.7	3.3	3.3	3.3	3.0	2.2
Ref No.	IC8051																			
MODE	21	22	23	24	25	26	27	28	29	30	31	32	33	34	35	36	37	38	39	40
CD PLAY	1.6	0.1	-	-	-	-	3.4	0	-	-	-	-	-	-	-	-	3.4	1.7	2.7	-
Ref No.	IC8051																			
MODE	41	42	43	44	45	46	47	48	49	50	51	52	53	54						
CD PLAY	0.1	3.0	3.4	3.2	3.1	0	3.0	3.1	3.4	2.8	2.8	0	2.9	0						
Ref No.	IC8111																			
MODE	1	2	3	4	5	6	7	8												
CD PLAY	3.4	0	0.1	-	-	0	0	4.9												
Ref No.	IC8251																			
MODE	1	2	3	4	5	6	7	8	9	10	11	12	13	14	15	16	17	18	19	20
CD PLAY	1.7	1.7	1.7	1.9	1.9	1.8	0	4.9	3.4	0.1	2.6	2.4	2.5	2.5	4.5	4.6	5.1	4.0	0.1	0.6
Ref No.	IC8251																			
MODE	21	22	23	24	25	26	27	28												
CD PLAY	9.6	9.4	1.8	1.7	1.7	1.7	3.4	3.2												
Ref No.	IC8421																			
MODE	1	2	3	4	5	6	7	8	9	10	11	12	13	14	15	16	17	18	19	20
CD PLAY	0	3.4	3.0	3.4	1.7	0.9	1.7	1.7	4.8	0	0.9	0.1	0.1	0	2.4	2.4	4.9	0	2.4	2.4
Ref No.	IC8421																			
MODE	21	22	23	24	25	26	27	28												
CD PLAY	2.4	4.9	-	0	2.5	2.4	2.4	4.8												
Ref No.	IC8601																			
MODE	1	2	3																	
CD PLAY	0	3.2	3.4																	
Ref No.	IC8606																			
MODE	1	2	3	4	5															
CD PLAY	0.7	1.2	0	0	0															
Ref No.	IC8611																			
MODE	1	2	3	4	5	6	7	8												
CD PLAY	0.1	0.1	0.1	0.1	3.4	3.4	0.1	3.4												
Ref No.	IC8651																			
MODE	1	2	3	4	5	6	7	8	9	10	11	12	13	14	15	16	17	18	19	20
CD PLAY	-	-	-	-	-	-	-	-	-	-	-	2.9	3.4	3.4	1.0	-	-	-	-	-
Ref No.	IC8651																			
MODE	21	22	23	24	25	26	27	28	29	30	31	32	33	34	35	36	37	38	39	40
CD PLA\	-	-	-	-	-	2.4	0	1.9	1.0	1.0	1.0	1.0	1.4	1.2	1.5	1.5	3.4	1.4	1.2	1.3
Ref No.	IC8651																			
MODE	41	42	43	44	45	46	47	48												
CD PLAY	1.4	1.4	1.7	1.7	1.9	0	3.4	-												
Ref No.	IC8691										IC8695									
MODE	1	2	3	4	5						1	2	3	4	5					
CD PLAY	3.0	3.0	0.1	4.3	4.9						0	0	0	0	4.9					
Ref No.	Q8550				Q8551				Q8552				Q8560				Q8561			
MODE	E	C	B		E	C	B		E	C	B		E	C	B		E	C	B	
CD PLAY	4.9	4.8	4.2		0.1	4.8	0.1		4.8	0	4.8		0.1	0.1	0.7		1.5	3.5	2.1	
Ref No.	Q8562				Q8606				Q8607											
MODE	E	C	B		E	C	B		E	C	B									
CD PLAY	4.2	2.3	3.6		0	0.1	0.7		0	3.2	0.1									
Ref No.	QR8111				QR8112				QR8420				QR8571							
MODE	E	C	B		E	C	B		E	C	B		E	C	B					
CD PLAY	0.1	0.1	1.2		0.1	4.5	0.1		0	4.0	0.1		3.4	3.3	0.1					

A DVD MODULE P.C.B. (REP3867D) (SIDE:A)

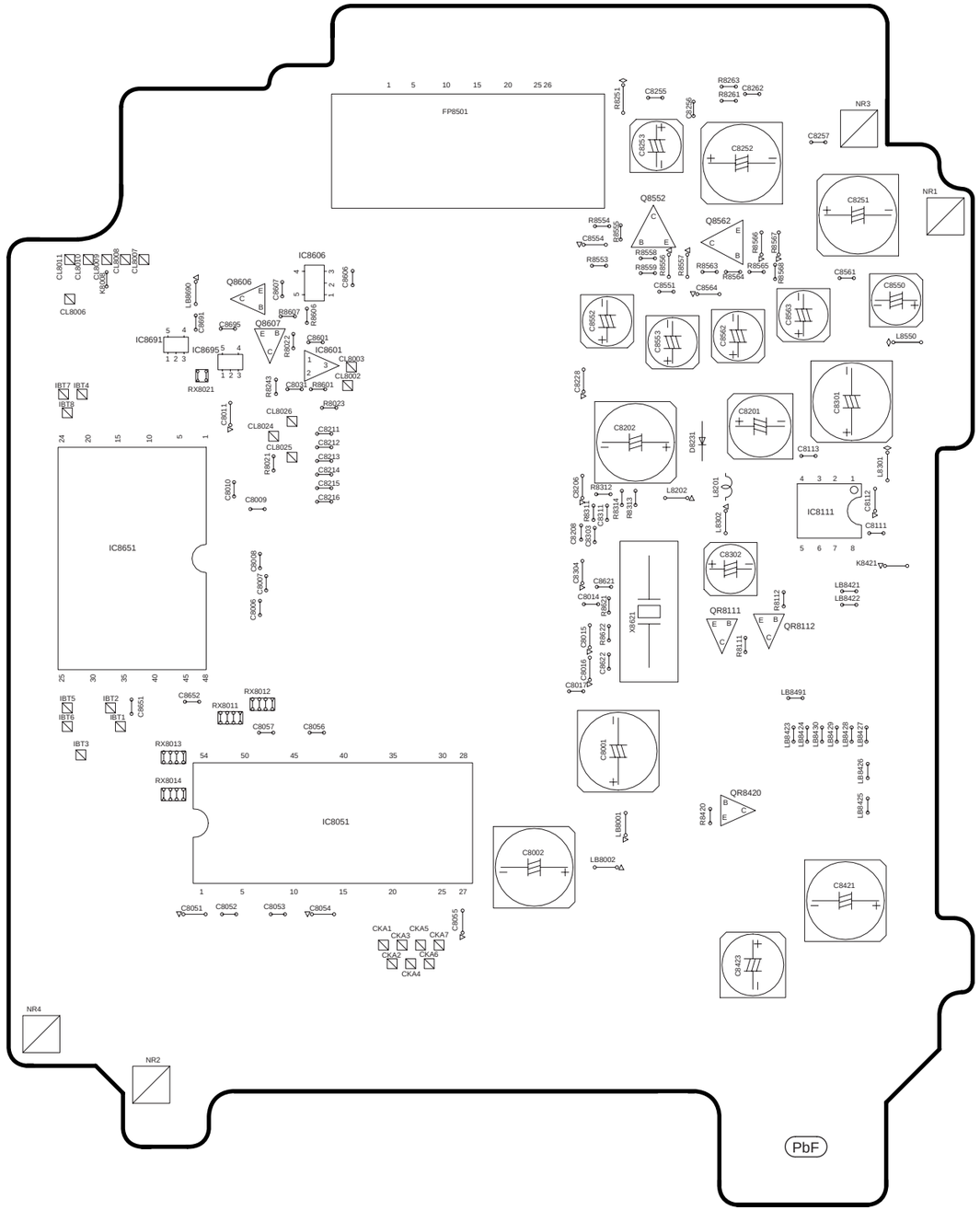

A DVD MODULE P.C.B. (REP3867D) (SIDE:B)

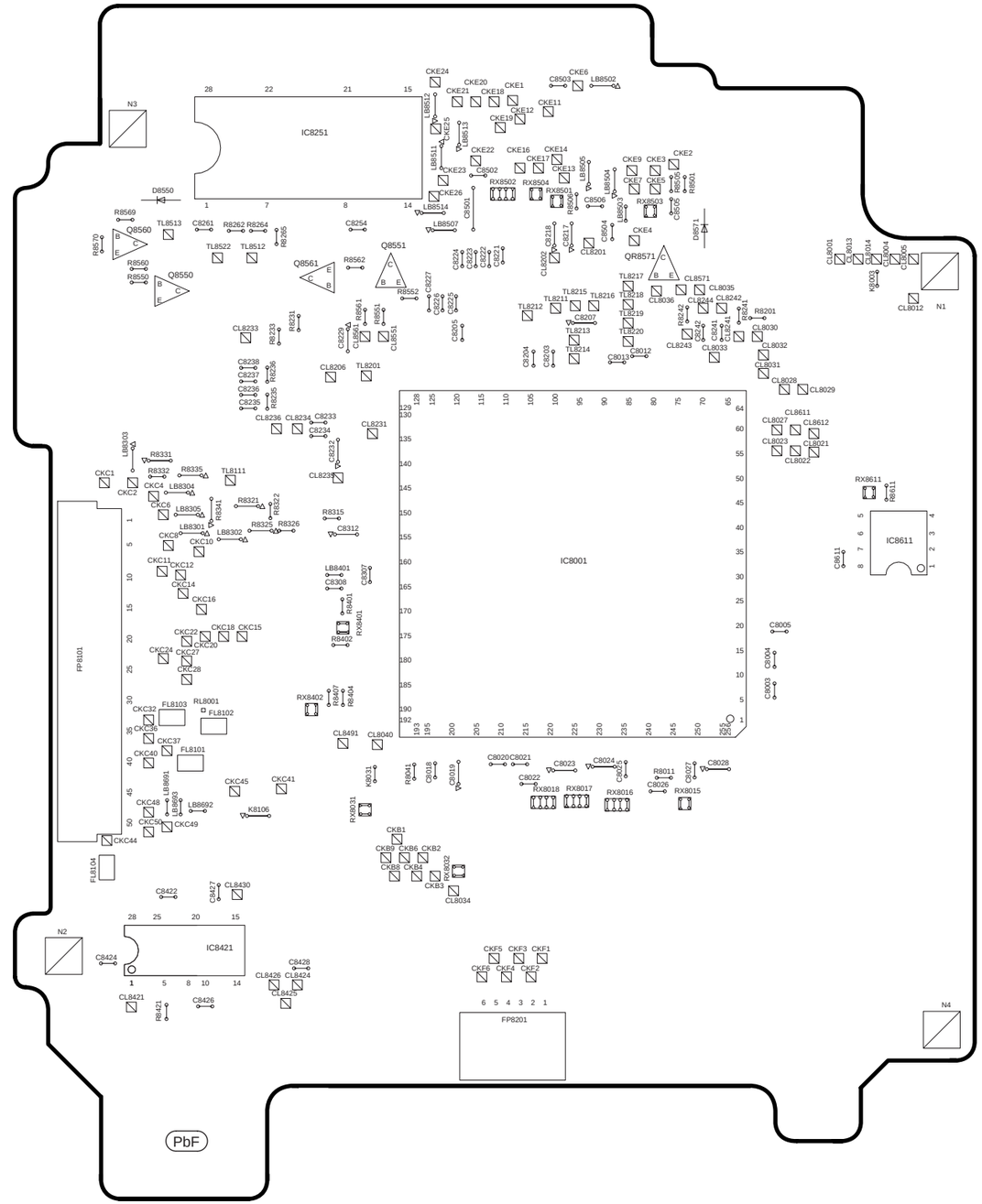

SA-HT840GC/GS/GN DVD MODULE P.C.B.

B MAIN P.C.B. (REPX0485B...GC/GS, REPX0485D...GN)

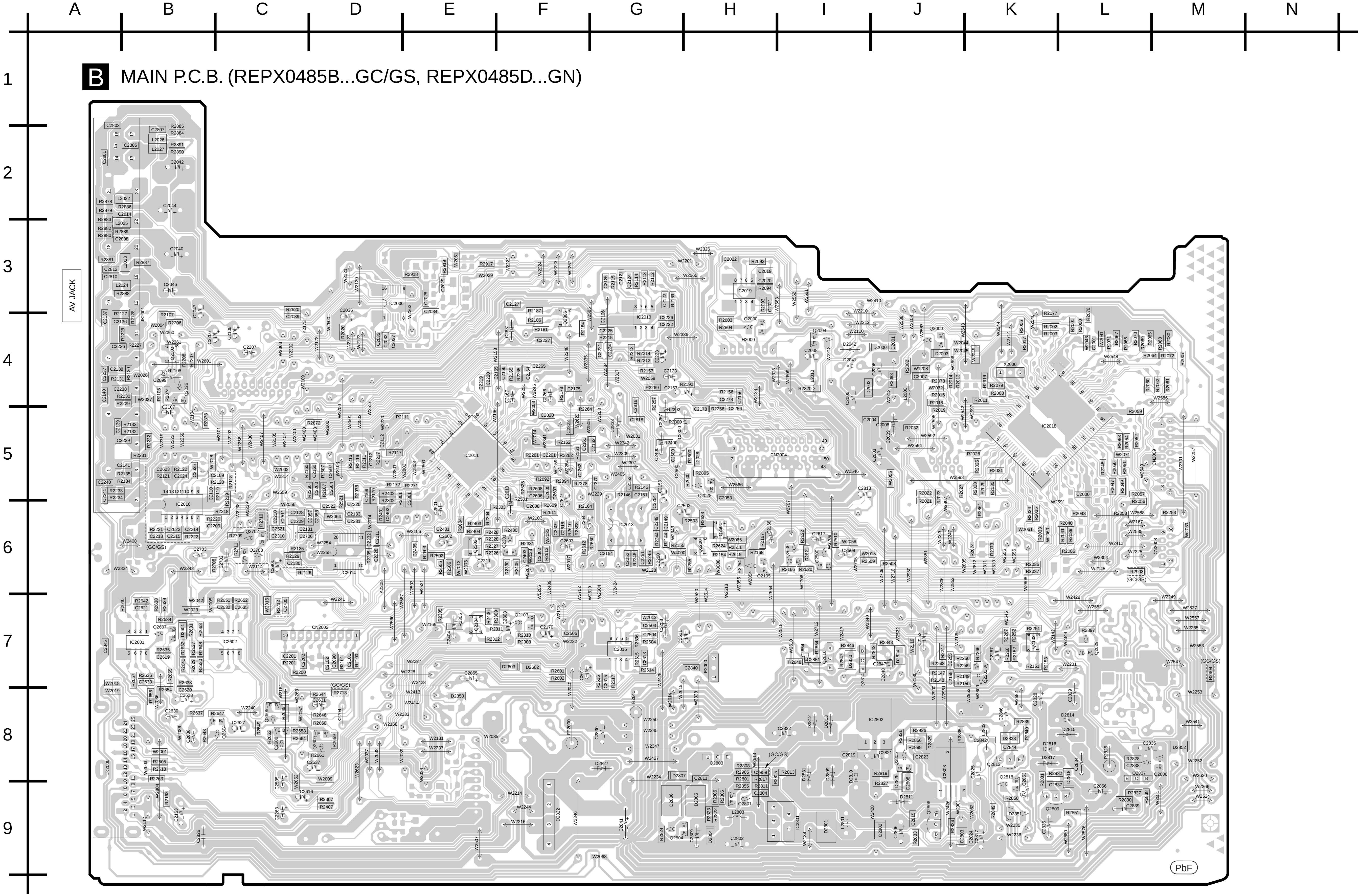

C FL P.C.B (REPX0457B...GC/GS, REPX0457A..GN)

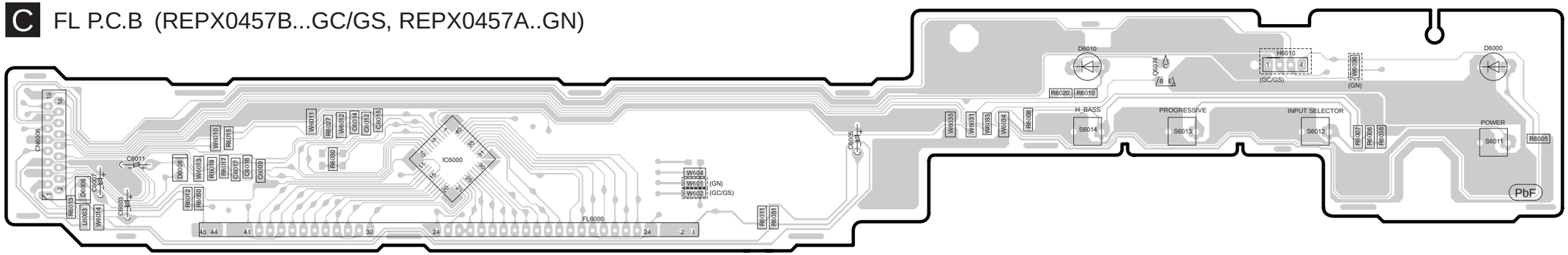

D VOLUME P.C.B (REPX0457B...GC/GS, REPX0457A...GN)

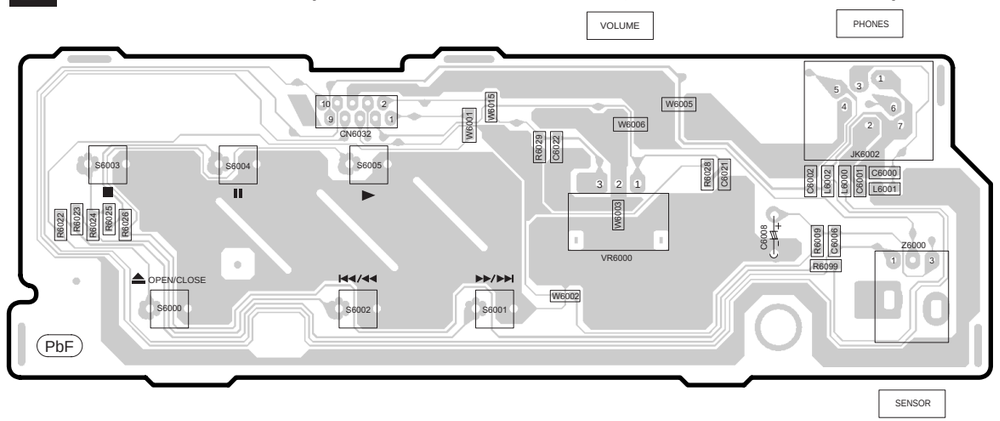

E TRAY LOADING P.C.B (REP3288A)

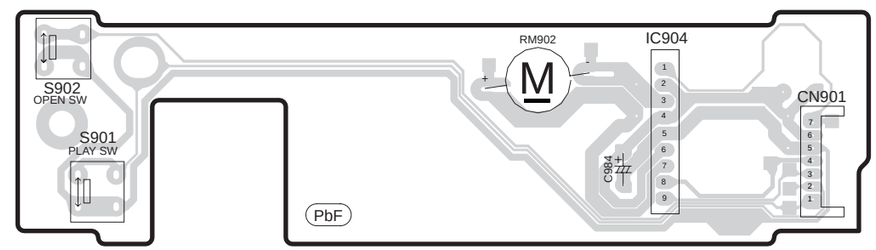

F MIC P.C.B (REPX0485B...GC/GS ONLY)

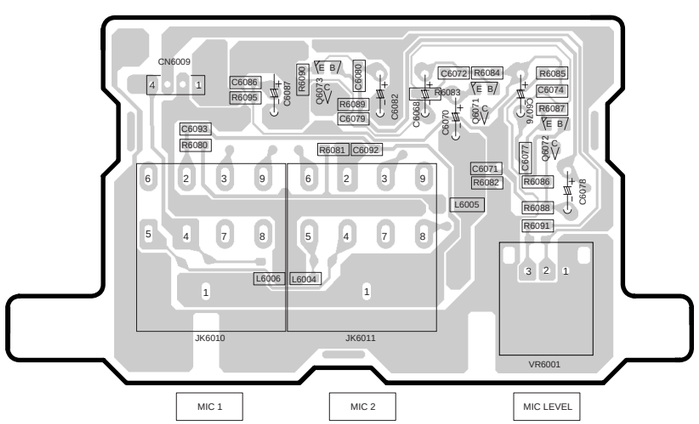

SA-HT840GC/GS/GN FL/VOLUME/TRAY LOADING/MIC P.C.B.